FLOW PRODUCTS

Fittings | Tubes | Valves | Nozzles

IRRIGATION

ANIMAL HEALTH

INDUSTRIAL

SANITATION

MEDICAL

WATER TREATMENT

CUTTING OIL

FOOD INDUSTRY

PNEUMATICS



tefen

Keep your business flowing.
Tefenitely.



About TEFEN

Tefen Flow and Dosing Technologies is a manufacturer of fittings and flow products, with more than 50 years of experience in product development. Tefen designs, manufactures & sells a wide range of flow products.

Tefen fittings are simple to use and require no special tools to enable reliable leak-free connection.

Our products serve a broad spectrum of international market sectors such as automation, pneumatics, hydraulics, food industry, medical device, and other industrial applications, and are also used for the agriculture industry.

Tefen customers rely on innovative products and solutions that provide uncompromising connections, outstanding performance, unmatched reliability and long service life. Our application-specific solutions create value for our customers and provide them with competitive advantage.

Tefen is dedicated to quality and customer service and satisfaction customers all over the world.
Tefen is certified for ISO 9001:2015 and we meet international standards.

CE

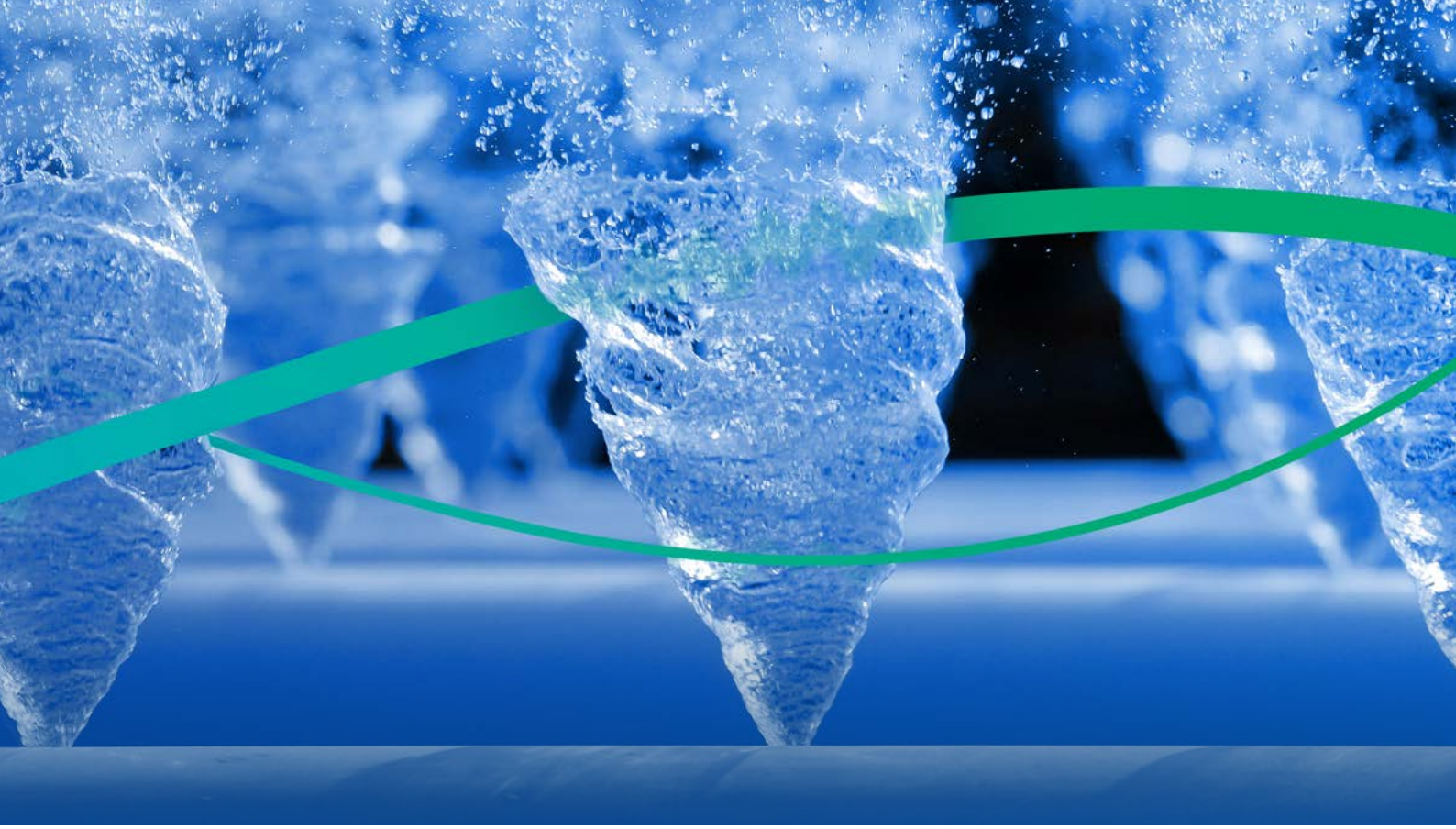

Food Contact
FDA 21 CFR

Food Contact
(EU) 1935/2004

Those prestigious stamps of approval is further proof that Tefen's PVDF products meet strict and superior standards, for public health.

NSF/ANSI 61

RoHS compliant

We are glad to continue to evolve and provide you with the high-level & high-quality, safe products that you seek.

REACH COMPLIANT

TSCA Compliant

WRAS APPROVED PRODUCT

APPROVED PROP 65

FLOW PRODUCTS INDEX

Technical Information 5

Fittings

PVDF Fittings 7
Tight Push 35
Barb Block 42
Barb Connectors 53
Hose Fittings 60
Threaded Connectors 76
Quick Release 84
Unique Solutions 86

Flow Products

Tubes 92
Valves 96
Spraying and Fogging Nozzles 100
Air Blow Guns 107

Technical Information

Recommended Tightening Torque

Thread Size	Nylon 66		PP		PVDF	
	Nm	ft lb	Nm	ft lb	Nm	ft lb
⅛"	0.1	0.07	0.01	0.01	0.1	0.07
¼"	0.8	0.6	0.3	0.2	1	0.8
⅜"	4	3	1	1	5	3
½"	6	4	2	2	8	6
¾"	8	6	5	4	16	12
1"	10	7	8	6	26	19

Fittings Tolerances (According to ISO 2768-c)

Size mm	Tolerance
1-6	±0.3
6-30	±0.5
30-120	±0.8

Chemical Resistance

	Water		Acids		Detergents	
	Cold	Hot	Weak	Strong	Weak	Strong
LDPE	3	1	3	2	3	3
HDPE	3	3	3	3	3	3
Nylon 6-6	3	2	1	1	3	2
Polypropylene	3	3	3	2	3	3
Acetal	3	3	2	1	3	3
PVDF	3	3	3	3	3	3

1 - Bad | 2 - Medium | 3 - Good

Note: Notice tube dimension differ between industries.
Fittings' dimensions refer to tube ID or OD, with respect to the common application.

Use thread seal tape



Minimun straight tube segment



MAINTENANCE

Tefen's fittings require minimum maintenance. Nevertheless, a visual periodic inspection is recommended. If damage or abbrasion is spotted, please replace the fitting, and make sure it fits the application.

When the temperature is below 4°C, we recommend draining the system if there is no flow in it, to avoid severe damage and leaks caused by the freezing water.

DISCLAIMER

All technical data is based on theoretical values and experiments held in Tefen's laboratory.
The information in this catalog is for reference only. Please consult our representitives for further details and advice.
Tefen is constantly seeking ways to improve the specifications of its products. Whilst every effort is made to produce up-to-date literature, this catalog should not be regarded as an infallible guide to current specifications, nor does it constitute an offer for the sale of any particular product. Prospective purchasers of the products from Tefen should satisfy themselves at the time they place the order as to the suitabilty of the products for the particular application. We have the right to alter specification without prior notice

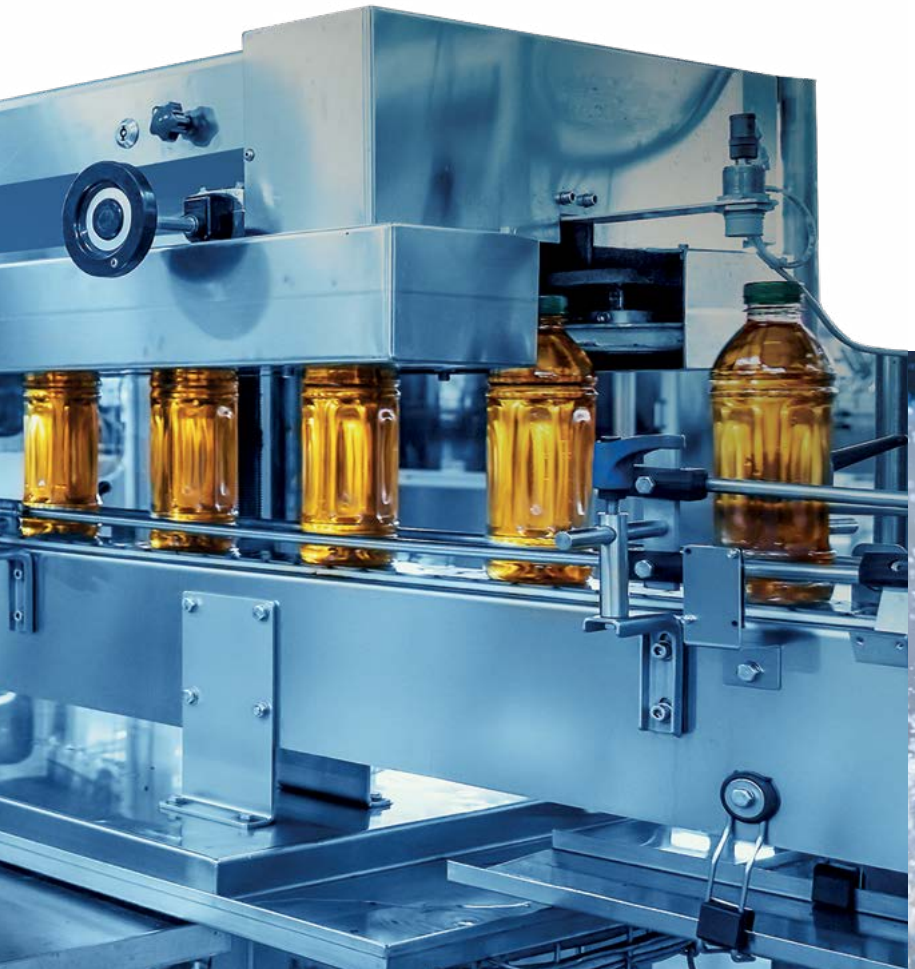



PVDF Fittings

PVDF (Polyvinylidene fluoride) is a well-known engineering polymer.
It demonstrate high mechanical properties, chemical resistance and thermal advantages, as well as high stability to withstand these advantages during exposure to **UV**, **radioactive** and **gamma** radiation.

Tefen's PVDF is a prime virgin material certified in use with drinking water (NSF) and in food stuff (FDA), Up to 120° [C].
It mainly used in the petrochemical, semiconductors, water distillation, pharma and food industries.

* Nuts material is Reinforced PP
  white - mm | blue - inch

Food Contact
FDA 21 CFR

NSF/ANSI 61


P. 8


P. 8


P. 9


P. 9


P. 10


P. 12


P. 13


P. 13


P. 14


P. 14


P. 15


P. 15


P. 16


P. 17


P. 18


P. 20


P. 22


P. 22


P. 23


P. 24


P. 24


P. 25


P. 26


P. 28


P. 28


P. 29


P. 30

P. 30


P. 31


P. 31


P. 32


P. 32


P. 33


P. 33


P. 34

Fittings Products

PVDF Fittings

PVDF

Working pressure
Up to 14 BAR
(200 psi) at 20 °C

Temperature
(-)20 - 120 °C
(subject to application)

Fittings' dimensions
refer to tube ID or OD, with respect to the common application



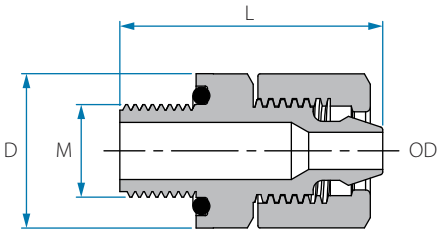

Male Barb Block Connector (with O-Ring)

Cat. No.	Tube OD mm	M (BSPP)	L mm	D mm	Color	O-ring
22F56846021	6	⅛"	27.2	16.0	White	Silicone
22F56846041	6	¼"	30.9	19.4		
22F56848021	8	⅛"	27.3	16.0		
22F56848041	8	¼"	31.1	19.3		
22F56850021	10	⅛"	27.2	16.0		
22F56850041	10	¼"	31.0	19.4		

Note: Packing 25 unit
* Nuts material is Reinforced PP

Cat. No.	Tube OD inch	M (BSPP)	L mm	D mm	Color	O-ring
22F56804021	¼"	⅛"	27.1	16.0	White & Navy Blue	Silicone
22F56804041	¼"	¼"	30.9	19.4		

Note: Packing 25 unit
* Nuts material is Reinforced PP



Reducing Barb Block Connector

Cat. No.	Tube OD mm	OD1 mm	L mm	SW	Color
22055648461	8	6	32.7	14	White

Cat. No.	Tube OD inch	OD1 inch	L mm	SW	Color
22255605041	5/16"	¼"	32.7	14	White & Navy Blue

Note: Packing 25 unit
* Nuts material is Reinforced PP

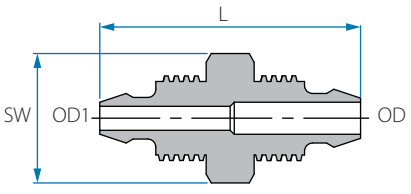

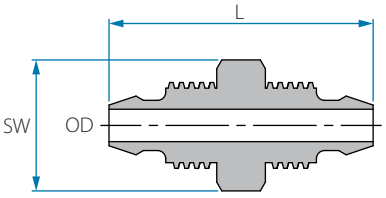

Union Barb Block Connector

Cat. No.	Tube OD mm	L mm	SW	Color
22056246001	6	32.7	14	White
22056248001	8	32.7	14	
22056252001	12	40.6	19	

Cat. No.	Tube OD inch	L mm	SW	Color
22256204001	¼"	32.7	14	White & Navy Blue
22256205001	5/16"	32.7	14	
22256208001	½"	40.6	19	

Note: Packing 25 unit
* Nuts material is Reinforced PP



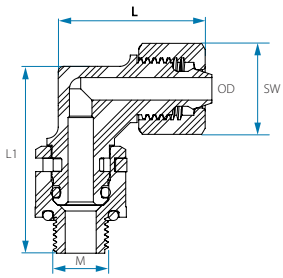

Union Elbow Swivel Connector

Cat. No.	Tube OD mm	M BSPP	L mm	L1	SW	O-ring	Color
22566948021	8	⅛"	27.3	33.2	16	Viton	White
22566948041	8	¼"	27.3	33.2	16	Viton	

Cat. No.	Tube OD mm	M BSPP	L mm	L1	SW	O-ring	Color
22566904021	8	¼"	27.3	33.2	16	Viton	White & Navy Blue
22566904021	8	¼"	27.3	33.2	16	Viton	



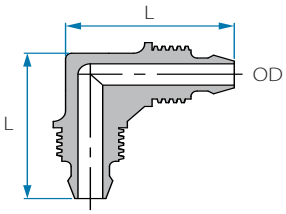

Union Elbow Barb Block Connector

Cat. No.	Tube OD mm	L mm	Color
22056546001	6	27.4	White
22056548001	8	27.4	
22056552001	12	40.5	

Cat. No.	Tube OD inch	L mm	Color
22256504001	¼"	27.4	White & Navy Blue
22256505001	5/16"	27.4	
22256508001	½"	40.5	

Note: Packing 25 unit

* Nuts material is Reinforced PP



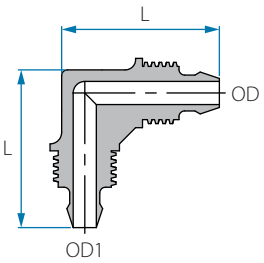

Reducing Elbow Barb Block Connector

Cat. No.	Tube OD mm	OD1 mm	L mm	Color
22055748461	8	6	27.3	White

Note: Packing 25 unit

* Nuts material is Reinforced PP

Fittings Products

PVDF Fittings

PVDF

Working pressure
Up to 14 BAR
(200 psi) at 20 °C

Temperature
(-)20 - 120 °C
(subject to application)

Fittings' dimensions
refer to tube ID or OD, with respect to the common application



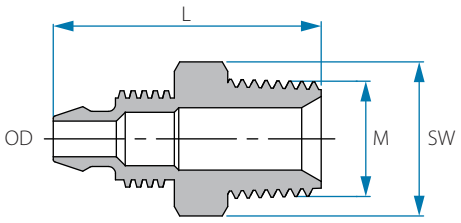

Male BSPT Barb Block Connector

Cat. No.	Tube OD mm	M (BSPT)	L mm	SW	Color
22056846021	6	⅛"	28.2	13	
22056846041	6	¼"	31	15	
22056846061	6	⅜"	31.4	17	
22056846081	6	½"	34.1	22	
22056846121	6	¾"	35.5	27	
22056848021	8	⅛"	28.1	13	
22056848041	8	¼"	29.5	15	
22056848061	8	⅜"	31.7	17	
22056848081	8	½"	34.1	22	
22056848121	8	¾"	26.1	27	White
22056850041	10	¼"	36.1	17	
22056850061	10	⅜"	35.8	17	
22056850081	10	½"	37.9	22	
22056850121	10	¾"	38.9	27	
22056852041	12	¼"	36.6	17	
22056852061	12	⅜"	37.3	17	
22056852081	12	½"	40.1	22	
22056852121	12	¾"	40.1	27	

Cat. No.	Tube OD inch	M (BSPT)	L mm	SW	Color
22056804021	¼"	⅛"	27.5	13	
22056804041	¼"	¼"	31.1	15	
22056804061	¼"	⅜"	31.8	17	
22056804081	¼"	½"	35.5	22	
22056804121	¼"	¾"	35.5	27	
22056805021	5⁄16"	⅛"	27.6	13	
22056805041	5⁄16"	¼"	29.5	15	
22056805061	5⁄16"	⅜"	31.4	18	White & Navy Blue
22056806041	⅜"	¼"	36.1	17	
22056806061	⅜"	⅜"	36.6	17	
22056806081	⅜"	½"	35.8	22	
22056806121	⅜"	¾"	35.8	27	
22056808041	½"	¼"	38.9	14	
22056808061	½"	⅜"	37	17	
22056808081	½"	½"	37.3	22	
22056808121	½"	¾"	40.1	27	

Note: Packing 25 unit
* Nuts material is Reinforced PP

Male NPT Barb Block Connector



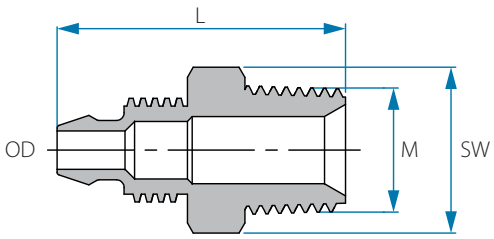

Cat. No.	Tube OD inch	M (NPT)	L mm	SW	Color
22256804021	¼"	⅛"	29.4	13	
22256804041	¼"	¼"	34.0	15	
22256804061	¼"	⅜"	35.1	18	
22256804081	¼"	½"	40.2	22	
22256804121	¼"	¾"	41.0	27	
22256805021	5⁄16"	⅛"	29.4	13	
22256805041	5⁄16"	¼"	34.0	15	
22256805061	5⁄16"	⅜"	35.1	18	
22256805081	5⁄16"	½"	40.2	22	White & Grey
22256805121	5⁄16"	¾"	41.0	27	
22256806041	⅜"	¼"	37.6	15	
22256806061	⅜"	⅜"	38.6	18	
22256806081	⅜"	½"	43.7	22	
22256806121	⅜"	¾"	44.4	27	
22256808041	½"	¼"	38.8	15	
22256808061	½"	⅜"	40.0	18	
22256808081	½"	½"	45.0	22	
22256808121	½"	¾"	45.8	18	

Note: Packing 25 unit

* Nuts material is Reinforced PP

Fittings Products

PVDF Fittings

PVDF

Working pressure
Up to 14 BAR
(200 psi) at 20 °C

Temperature
(-)20 - 120 °C
(subject to application)

Fittings' dimensions
refer to tube ID or OD, with respect to the common application



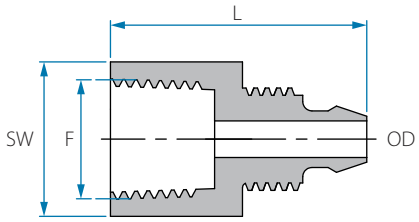

Female BSPT Barb Block Connector

Cat. No.	Tube OD mm	F (BSPT)	L mm	SW	Color
22056646021	6	⅛"	26.3	14	
22056646041	6	¼"	27.8	17	
22056648021	8	⅛"	26.3	14	
22056648041	8	¼"	28.0	17	
22056648061	8	⅜"	30.6	22	White
22056648081	8	½"	32.5	26	
22056650041	10	¼"	31.7	17	
22056650061	10	⅜"	33.0	22	
22056650081	10	½"	35.1	26	

Cat. No.	Tube OD inch	F (BSPT)	L mm	SW	Color
22056604021	¼"	⅛"	26.3	14	
22056604041	¼"	¼"	27.8	17	
22056605021	5/16"	⅛"	26.3	14	
22056605041	5/16"	¼"	28.0	17	
22056605061	5/16"	⅜"	30.6	22	White & Navy Blue
22056605081	5/16"	½"	32.5	26	
22056606041	⅜"	¼"	31.7	17	
22056606061	⅜"	⅜"	33.0	22	
22056606081	⅜"	½"	35.1	26	

Note: Packing 25 unit
* Nuts material is Reinforced PP

Female NPT Barb Block Connector

Cat. No.	Tube OD inch	F (NPT)	L mm	SW	Color
22256605061	5/16"	⅜"	33.8	14	
22256605081	5/16"	½"	37.3	14	
22256606041	⅜"	¼"	32.9	17	White & Grey
22256606061	⅜"	⅜"	34.5	17	
22256606081	⅜"	½"	38.0	17	

Note: Packing 25 unit
* Nuts material is Reinforced PP



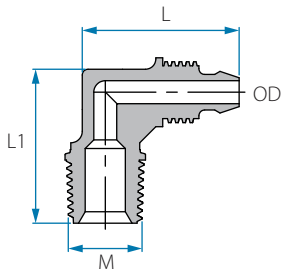

BSPT Male Elbow Barb Block Connector

Cat. No.	Tube OD mm	M (BSPT)	L mm	L1 mm	Color
22056946021	6	⅛"	27.6	22.4	
22056946041	6	¼"	27.6	26.8	
22056948021	8	⅛"	27.6	26.8	
22056948041	8	¼"	27.6	26.8	☐ White
22056948061	8	⅜"	28.1	29.4	
22056952041	12	¼"	40.3	31.7	
22056952061	12	⅜"	40.3	32.0	
22056952081	12	½"	40.3	36.0	

Cat. No.	Tube OD inch	M (BSPT)	L mm	L1 mm	Color
22056904021	¼"	⅛"	27.6	22.4	
22056904041	¼"	¼"	27.6	26.8	
22056905021	5/16"	⅛"	27.6	26.8	
22056905041	5/16"	¼"	27.6	26.8	White & Navy Blue
22056905061	5/16"	⅜"	28.1	29.4	
22056908041	½"	¼"	40.3	31.7	
22056908061	½"	⅜"	40.3	32.0	
22056908081	½"	½"	40.3	36.0	

Note: Packing 25 unit
* Nuts material is Reinforced PP

NPT Male Elbow Barb Block Connector

Cat. No.	Tube OD inch	M (NPT)	L mm	L1 mm	Color
22256904021	¼"	⅛"	24.0	27.5	
22256904041	¼"	¼"	29.0	27.5	White & Grey
22256905021	5/16"	⅛"	24.0	27.5	
22256905041	5/16"	¼"	29.0	27.5	

Note: Packing 25 unit
* Nuts material is Reinforced PP



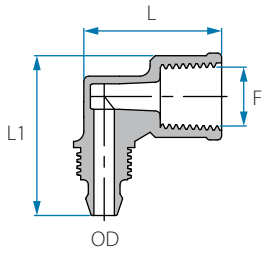

BSPT Female Elbow Barb Block Connector

Cat. No.	Tube OD mm	F (BSPT)	L mm	L1 mm	Color
22056046021	6	⅛"	25.1	27.3	
22056046041	6	¼"	27.0	27.3	☐ White
22056048041	8	¼"	27.0	27.3	

Note: Packing 25 unit
* Nuts material is Reinforced PP

Fittings Products

PVDF Fittings

PVDF

Working pressure
Up to 14 BAR
(200 psi) at 20 °C

Temperature
(-)20 - 120 °C
(subject to application)

Fittings' dimensions
refer to tube ID or OD, with respect to the common application

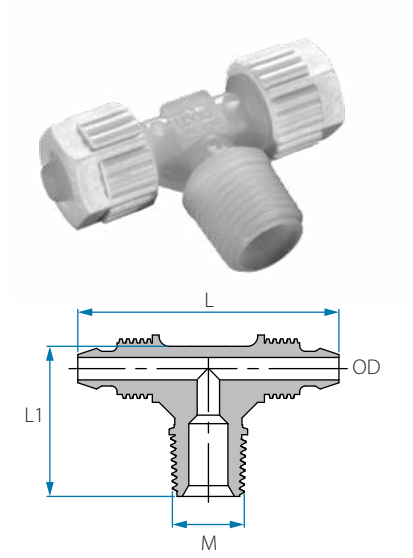

BSPT Male Barb Block Branch T

Cat. No.	Tube OD mm	M (BSPT)	L mm	L1 mm	Color
22057146021	6	⅛"	46.8	22.6	
22057146041	6	¼"	46.8	26.8	
22057148021	8	⅛"	46.8	22.6	
22057148041	8	¼"	46.8	26.8	White
22057148061	8	⅜"	47.2	29.4	
22057152041	12	¼"	67.0	31.6	
22057152061	12	⅜"	67.0	32.0	
22057152081	12	½"	67.0	36.0	

Cat. No.	Tube OD inch	M (BSPT)	L mm	L1 mm	Color
22057104021	¼"	⅛"	46.8	22.6	
22057104041	¼"	¼"	46.8	26.8	
22057105021	5/16"	⅛"	46.8	22.6	
22057105041	5/16"	¼"	46.8	26.8	White & Navy Blue
22057105061	5/16"	⅜"	47.2	29.4	
22057108041	½"	¼"	67.0	31.6	
22057108061	½"	⅜"	67.0	32.0	

Note: Packing 25 unit
* Nuts material is Reinforced PP

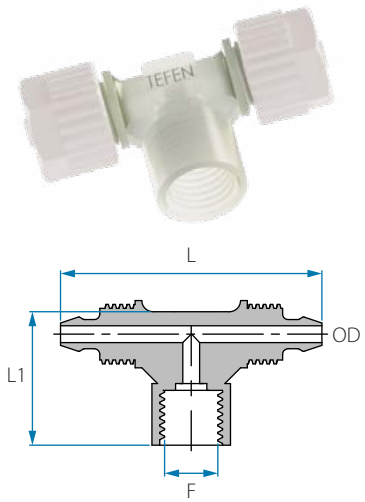

BSPT Female Branch Barb Block Connector

Cat. No.	Tube OD mm	F (BSPT)	L mm	L1 mm	Color
22057346021	6	⅛"	46.6	25.0	White
22057348041	8	¼"	46.8	28.9	

Cat. No.	Tube OD inch	F (BSPT)	L mm	L1 mm	Color
22057304021	¼"	⅛"	46.6	25.0	White & Navy Blue
22057305041	5/16"	¼"	46.8	27.2	

Note: Packing 25 unit
* Nuts material is Reinforced PP

BSPT Barb Block Male Run T



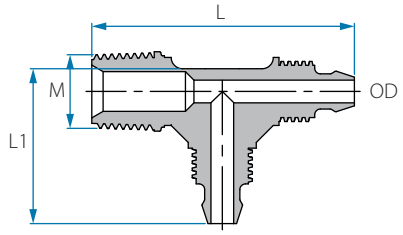

Cat. No.	Tube OD mm	M (BSPT)	L mm	L1 mm	Color
22057246021	6	⅛"	41.9	27.5	
22057246041	6	¼"	46.2	27.5	
22057248021	8	⅛"	41.9	27.5	
22057248041	8	¼"	46.2	27.5	
22057248061	8	⅜"	58.8	43.2	White
22057252041	12	¼"	57.7	40.3	
22057252061	12	⅜"	62.5	40.3	
22057252081	12	½"	62.7	40.4	

Cat. No.	Tube OD inch	M (BSPT)	L mm	L1 mm	Color
22057204021	¼"	⅛"	41.9	27.5	
22057204041	¼"	¼"	46.2	27.5	
22057205021	5/16"	⅛"	41.9	27.5	
22057205041	5/16"	¼"	46.2	27.5	White & Navy Blue
22057205061	5/16"	⅜"	58.8	43.2	
22057208041	½"	¼"	57.7	40.3	
22057208061	½"	⅜"	62.5	40.3	
22057208081	½"	½"	62.7	40.4	

Note: Packing 25 unit
* Nuts material is Reinforced PP

NPT Male Barb Block Run T

Cat. No.	Tube OD inch	M (NPT)	L mm	L1 mm	Color
22257204021	¼"	⅛"	43.4	27.4	
22257204041	¼"	¼"	48.2	27.4	
22257205021	5/16"	⅛"	43.5	27.4	White & Grey
22257205041	5/16"	¼"	48.3	27.4	
22257205061	5/16"	⅜"	67.0	27.4	
22257208021	½"	⅛"	48.0	43.2	

Note: Packing 25 unit
* Nuts material is Reinforced PP

BSPT Male Barb Block T - 2 threads



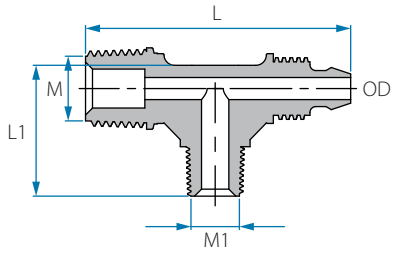

Cat. No.	Tube OD mm	M (BSPT)	M1 (BSPT)	L mm	L1 mm	Color
22057802041	8	¼"	⅛"	46.2	22.6	White

Note: Packing 25 unit
* Nuts material is Reinforced PP

Fittings Products

PVDF Fittings

PVDF

Working pressure
Up to 14 BAR
(200 psi) at 20 °C

Temperature
(-)20 - 120 °C
(subject to application)

Fittings' dimensions
refer to tube ID or OD, with respect to the common application

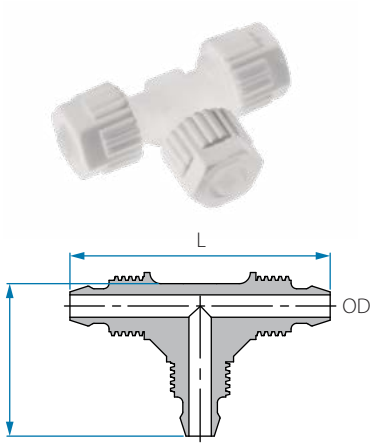

Union T Barb Block Connector

Cat. No.	Tube OD mm	L mm	L1 mm	Color
22056446461	6	46.8	27.5	
22056448481	8	46.8	27.5	☐ White
22056452521	12	67.1	40.4	

Cat. No.	Tube OD inch	L mm	L1 mm	Color
22256404041	¼"	46.8	27.5	
22256405051	5/16"	46.8	27.5	◨ White & Navy Blue
22256408081	½"	67.1	40.4	

Note: Packing 25 unit
* Nuts material is Reinforced PP

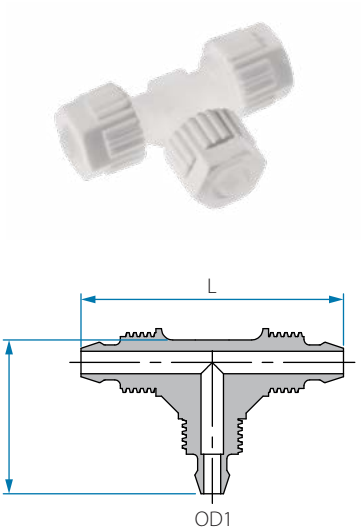

Reducing T Barb Block Connector

Cat. No.	Tube OD mm	OD1 mm	L mm	L1 mm	Color
22055846481	6	8	46.8	27.4	☐ White
22055848461	8	6	46.8	27.4	

Note: Packing 25 unit
* Nuts material is Reinforced PP

BSPT Female Hose Connector

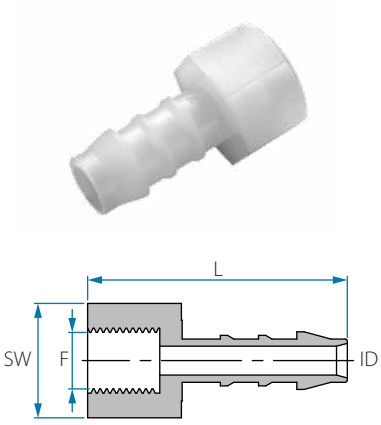

Cat. No.	Tube ID mm	F (BSPT)	L mm	SW	Color
12556745021	5	⅛"	34.4	14	
12556745041	5	¼"	35.2	17	
12556745061	5	⅜"	36.5	22	
12556745081	5	½"	38.7	26	
12556746021	6	⅛"	36.3	14	
12556746041	6	¼"	37.2	17	
12556746061	6	⅜"	38.3	22	
12556746081	6	½"	40.8	26	
12556748021	8	⅛"	38.2	14	
12556748041	8	¼"	39.4	17	
12556748061	8	⅜"	40.4	22	☐ White
12556748081	8	½"	42.7	26	
12556750041	10	¼"	41.5	17	
12556750061	10	⅜"	42.3	22	
12556750081	10	½"	45.0	26	
12556752041	12	¼"	42.4	17	
12556752061	12	⅜"	43.3	22	
12556752081	12	½"	46.0	26	
12556754061	14	⅜"	45.0	22	
12556754081	14	½"	47.3	26	
12556756081	16	½"	48.1	26	
12556759081	19	½"	48.8	26	

Note: Packing 25 unit

NPT Female Hose Connector

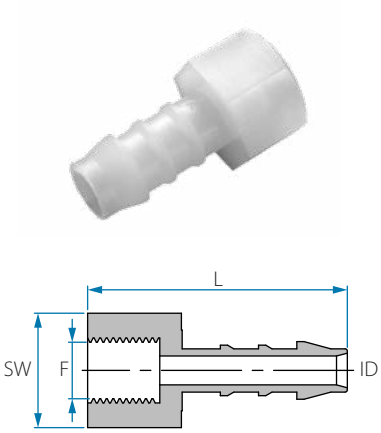

Cat. No.	Tube ID inch	F (NPT)	L mm	SW	Color
12356704021	¼"	⅛"	36.7	14	
12356704041	¼"	¼"	40.1	17	
12356704061	¼"	⅜"	40.0	22	
12356704081	¼"	½"	43.7	27	
12356705021	5⁄16"	⅛"	38.9	14	
12356705041	5⁄16"	¼"	41.8	17	
12356705061	5⁄16"	⅜"	42.0	22	
12356705081	5⁄16"	½"	45.0	27	
12356706041	⅜"	¼"	44.1	17	☐ White
12356706061	⅜"	⅜"	43.9	22	
12356706081	⅜"	½"	47.2	27	
12356708041	½"	¼"	44.7	17	
12356708061	½"	⅜"	45.2	22	
12356708081	½"	½"	48.8	27	
12356709061	9⁄16"	⅜"	46.5	22	
12356709081	9⁄16"	½"	50.3	27	
12356710081	⅝"	½"	50.4	27	
12356712081	¾"	½"	51.7	27	

Note: Packing 25 unit

PVDF Fittings

PVDF

Working pressure
Up to 14 BAR
(200 psi) at 20 °C

Temperature
(-)20 - 120 °C
(subject to application)

Fittings' dimensions
refer to tube ID or OD, with respect to the common application



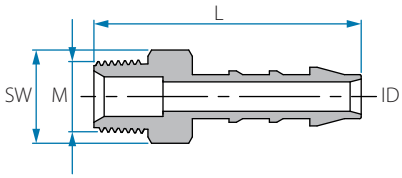

BSPT Male Hose Connector

Cat. No.	Tube ID mm	M (BSPT)	L mm	SW	Color
12556844021	4	⅛"	31.2	11	
12556844041	4	¼"	33.8	14	
12556845021	5	⅛"	34.7	11	
12556845041	5	¼"	38.3	14	
12556846021	6	⅛"	35.0	11	
12556846041	6	¼"	39.2	14	
12556846061	6	⅜"	39.1	17	
12556846081	6	½"	42.3	22	
12556846121	6	¾"	43.0	22	
12556848021	8	⅛"	39.8	11	
12556848041	8	¼"	43.0	14	
12556848061	8	⅜"	43.0	17	
12556848081	8	½"	46.1	22	
12556848121	8	¾"	37.1	17	
12556850041	10	¼"	47.1	14	
12556850061	10	⅜"	45.2	17	☐ White
12556850081	10	½"	48.3	22	
12556850121	10	¾"	49.3	27	
12556852041	12	¼"	46.0	14	
12556852061	12	⅜"	46.0	17	
12556852081	12	½"	49.3	22	
12556852121	12	¾"	50.0	27	
12556854061	14	⅜"	47.5	17	
12556854081	14	½"	50.8	22	
12556854121	14	¾"	51.7	27	
12556856081	16	½"	51.3	22	
12556856121	16	¾"	52.2	27	
12556859081	19	½"	52.2	22	
12556859121	19	¾"	53.3	27	
12556859161	19	1"	60.1	36	
12556865121	25	¾"	54.8	27	
12556865161	25	1"	66.6	36	

Note: Packing 25 unit



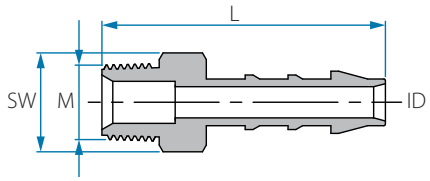

NPT Male Hose Connector

Cat. No.	Tube ID inch	M (NPT)	L mm	SW	Color
12356802021	5/32"	1/8"	30.7	11	
12356802041	5/32"	1/4"	35.3	14	
12356803021	3/16"	1/8"	36.3	11	
12356803041	3/16"	1/4"	39.7	14	
12356804021	1/4"	1/8"	36.1	11	
12356804041	1/4"	1/4"	40.6	14	
12356804061	1/4"	3/8"	41.9	17	
12356804081	1/4"	1/2"	46.7	22	
12356805021	5/16"	1/8"	40.2	11	
12356805041	5/16"	1/4"	44.7	14	
12356805061	5/16"	3/8"	45.9	17	
12356805081	5/16"	1/2"	51.0	22	
12356806041	3/8"	1/4"	46.5	14	
12356806061	3/8"	3/8"	47.7	17	☐ White
12356806081	3/8"	1/2"	53.2	22	
12356806121	3/8"	3/4"	54.3	27	
12356808041	1/2"	1/4"	47.7	14	
12356808061	1/2"	3/8"	48.9	17	
12356808081	1/2"	1/2"	53.7	22	
12356808121	1/2"	3/4"	54.7	27	
12356809061	9/16"	3/8"	51.6	17	
12356809081	9/16"	1/2"	55.4	22	
12356809121	9/16"	3/4"	56.1	27	
12356810081	5/8"	1/2"	56.3	22	
12356810121	5/8"	3/4"	56.8	27	
12356812081	3/4"	1/2"	56.9	22	
12356812121	3/4"	3/4"	57.7	27	

Note: Packing 25 unit

Fittings Products

PVDF Fittings

PVDF

Working pressure
Up to 14 BAR
(200 psi) at 20 °C

Temperature
(-)20 - 120 °C
(subject to application)

Fittings' dimensions
refer to tube ID or OD, with respect to the common application



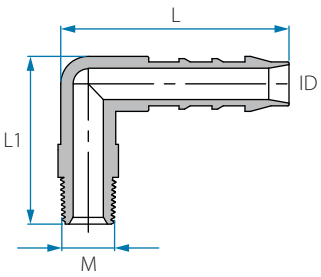

BSPT Male Elbow Hose Connector

Cat. No.	Tube ID mm	M (BSPT)	L mm	L1 mm	Color
12556944021	4	⅛"	26.7	24.1	
12556944041	4	¼"	26.7	27.2	
12556945021	5	⅛"	31.8	26.8	
12556945041	5	¼"	29.8	32.0	
12556945081	5	½"	31.8	33.0	
12556946021	6	⅛"	35.5	27.3	
12556946041	6	¼"	35.5	29.8	
12556946061	6	⅜"	35.5	30.0	
12556946081	6	½"	35.5	33.7	
12556948021	8	⅛"	41.5	30.4	
12556948041	8	¼"	41.5	32.8	
12556948061	8	⅜"	41.5	32.8	
12556948081	8	½"	41.5	36.8	
12556950041	10	¼"	45.5	33.9	☐ White
12556950061	10	⅜"	45.5	34.1	
12556950081	10	½"	45.5	37.8	
12556950121	10	¾"	45.5	38.9	
12556952041	12	¼"	48.7	35.0	
12556952061	12	⅜"	48.7	35.3	
12556952081	12	½"	48.7	39.0	
12556952121	12	¾"	48.7	39.7	
12556954061	14	⅜"	51.4	38.5	
12556954081	14	½"	51.4	42.3	
12556954121	14	¾"	51.4	43.3	
12556956081	16	½"	53.7	44.9	
12556956121	16	¾"	53.7	46.0	
12556959081	19	½"	56.0	46.4	
12556959121	19	¾"	56.4	47.5	

Note: Packing 25 unit



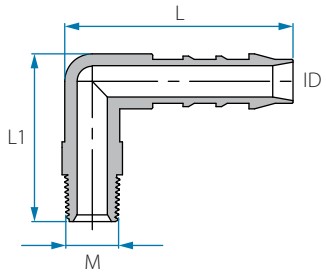

NPT Male Elbow Hose Connector

Cat. No.	Tube ID inch	M (NPT)	L mm	L1 mm	Color
12356902021	5/32"	1/8"	25.7	26.0	
12356902041	5/32"	1/4"	25.9	31.1	
12356903021	3/16"	1/8"	31.8	28.6	
12356903041	3/16"	1/4"	33.5	31.8	
12356903081	3/16"	1/2"	40.1	31.8	
12356904021	1/4"	1/8"	35.4	29.0	
12356904041	1/4"	1/4"	35.5	33.7	
12356904061	1/4"	3/8"	35.5	33.8	
12356904081	1/4"	1/2"	40.0	35.4	
12356905021	5/16"	1/8"	41.5	32.1	
12356905041	5/16"	1/4"	41.2	36.7	
12356905061	5/16"	3/8"	41.5	36.6	
12356905081	5/16"	1/2"	41.5	43.1	
12356906041	3/8"	1/4"	45.4	37.7	☐ White
12356906061	3/8"	3/8"	45.3	37.5	
12356906081	3/8"	1/2"	45.4	44.4	
12356906121	3/8"	3/4"	45.4	44.0	
12356908041	1/2"	1/4"	48.6	39.0	
12356908061	1/2"	3/8"	48.3	28.6	
12356908081	1/2"	1/2"	48.7	45.2	
12356908121	1/2"	3/4"	48.7	45.2	
12356909061	9/16"	3/8"	51.4	42.2	
12356909081	9/16"	1/2"	51.4	48.6	
12356909121	9/16"	3/4"	51.5	48.5	
12356910081	5/8"	1/2"	53.8	51.5	
12356910121	5/8"	3/4"	53.8	51.4	
12356912081	3/4"	1/2"	56.6	52.8	
12356912121	3/4"	3/4"	56.2	53.0	

Note: Packing 25 unit

Fittings Products

PVDF Fittings

PVDF

Working pressure
Up to 14 BAR
(200 psi) at 20 °C

Temperature
(-)20 - 120 °C
(subject to application)

Fittings' dimensions
refer to tube ID or OD, with respect to the common application

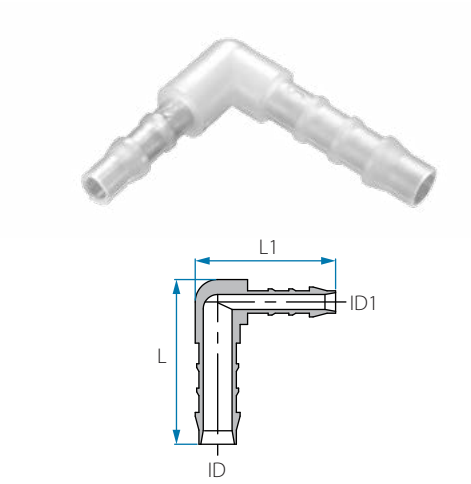

Reducing Elbow Hose Connector

Cat. No.	Tube ID mm	Tube ID1 mm	L mm	L1 mm	Color
12556645441	5	4	31.8	27.8	
12556646441	6	4	35.5	29.0	
12556646451	6	5	35.4	34.1	
12556648461	8	6	41.6	39.3	
12556650461	10	6	45.3	40.1	☐ White
12556650481	10	8	42.1	45.2	
12556652501	12	10	48.7	45.6	
12556654521	14	12	51.5	49.6	
12556656541	16	14	53.8	53.6	
12556659561	19	16	56.2	56.1	

Cat. No.	Tube ID inch	Tube ID1 inch	L mm	L1 mm	Color
12356603021	3/16"	5/32"	31.8	27.9	
12356604031	1/4"	3/16"	35.5	34.0	
12356605041	5/16"	1/4"	41.6	39.4	
12356606041	3/8"	1/4"	45.3	40.2	
12356606051	3/8"	5/16"	45.5	42.5	☐ White
12356608061	1/2"	3/8"	48.6	45.8	
12356609081	9/16"	1/2"	51.1	49.8	
12356610091	5/8"	9/16"	53.6	53.6	
12356612101	3/4"	5/8"	55.8	55.8	

Note: Packing 25 unit

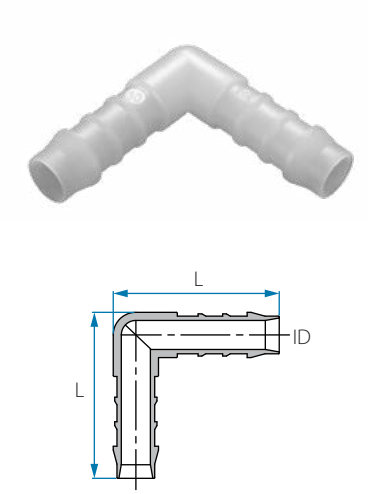

Union Elbow Hose Connector

Cat. No.	Tube ID mm	L mm	Color
12556544001	4	26.3	
12556545001	5	31.7	
12556546001	6	35.5	
12556548001	8	34.7	
12556550001	10	40.9	☐ White
12556552001	12	46.3	
12556554001	14	51.0	
12556556001	16	53.9	
12556559001	19	55.3	

Cat. No.	Tube ID inch	L mm	Color
12356502001	5/32"	26.3	
12356503001	3/16"	31.7	
12356504001	1/4"	35.5	
12356505001	5/16"	34.7	
12356506001	3/8"	40.9	☐ White
12356508001	1/2"	46.3	
12356509001	9/16"	51.0	
12356510001	5/8"	53.9	
12356512001	3/4"	55.3	

Note: Packing 25 unit

Reducing Hose Connector

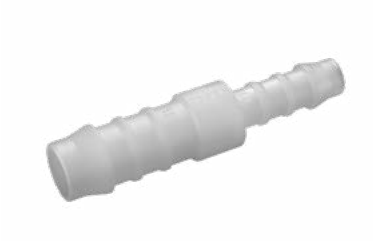

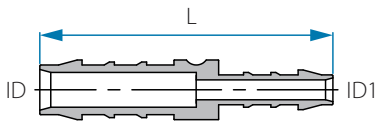

Cat. No.	Tube ID mm	Tube ID1 mm	L mm	Color
12555645441	5	4	42.2	
12555646441	6	4	45.7	
12555646451	6	5	50.6	
12555648451	8	5	54.4	
12555648461	8	6	56.3	
12555650461	10	6	58.9	
12555650481	10	8	62.0	
12555652481	12	8	63.8	☐ White
12555652501	12	10	65.3	
12555654501	14	10	69.1	
12555654521	14	12	69.9	
12555656521	16	12	70.3	
12555656541	16	14	71.7	
12555659541	19	14	72.7	
12555659561	19	16	73.2	

Cat. No.	Tube ID inch	Tube ID1 inch	L mm	Color
12355603021	3/16"	5/32"	42.2	
12355604021	1/4"	5/32"	45.7	
12355604031	1/4"	3/16"	50.6	
12355605031	5/16"	3/16"	54.4	
12355605041	5/16"	1/4"	56.3	
12355606041	3/8"	1/4"	58.9	
12355606051	3/8"	5/16"	62.0	
12355608051	1/2"	5/16"	63.8	☐ White
12355608061	1/2"	3/8"	65.3	
12355609061	9/16"	3/8"	69.1	
12355609081	9/16"	1/2"	69.9	
12355610081	5/8"	1/2"	70.3	
12355610091	5/8"	9/16"	71.7	
12355612091	3/4"	9/16"	72.7	
12355612101	3/4"	5/8"	73.2	

Note: Packing 25 unit

Fittings Products

PVDF Fittings

PVDF

Working pressure
Up to 14 BAR
(200 psi) at 20 °C

Temperature
(-)20 - 120 °C
(subject to application)

Fittings' dimensions
refer to tube ID or OD, with respect to the common application



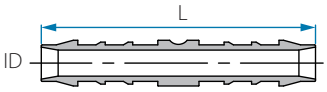

Union Hose Connector

Cat. No.	Tube ID mm	L mm	Color
12556244001	4	36.6	
12556245001	5	47.0	
12556246001	6	52.2	
12556248001	8	59.3	
12556250001	10	63.0	☐ White
12556252001	12	66.0	
12556254001	14	71.8	
12556256001	16	72.5	
12556259001	19	73.5	

Cat. No.	Tube ID inch	L mm	Color
12356202001	5/32"	36.6	
12356203001	3/16"	47.0	
12356204001	1/4"	52.2	
12356205001	5/16"	59.3	
12356206001	3/8"	63.0	☐ White
12356208001	1/2"	66.3	
12356209001	9/16"	71.9	
12356210001	5/8"	71.4	
12356211001	11/16"	59.1	
12356212001	3/4"	73.8	

Note: Packing 25 unit



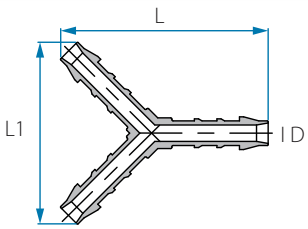

Y Hose Connector

Cat. No.	Tube ID mm	L mm	L1 mm	Color
12556344441	4	35.0	31.0	
12556346461	6	51.2	44.5	
12556348481	8	56.6	40.6	☐ White
12556350501	10	62.3	55.0	
12556357571	17	63.3	57.7	

Cat. No.	Tube ID inch	L mm	L1 mm	Color
12356302021	5/32"	35.5	30.8	
12356304041	1/4"	50.8	44.3	
12356305051	5/16"	55.6	49.4	☐ White
12356306061	3/8"	60.8	54.9	
12356311111	11/16"	62.5	57.4	

Note: Packing 25 unit

Union T Hose Connector

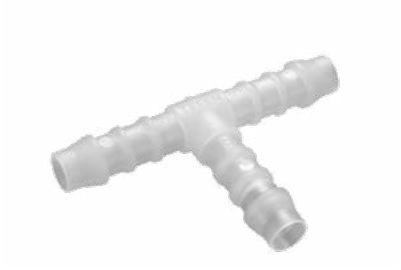

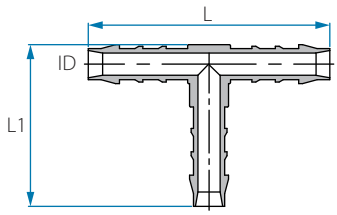

Cat. No.	Tube ID mm	L mm	L1 mm	Color
12556444441	4	39.5	24.3	
12556445451	5	50.7	30.8	
12556446461	6	55.8	34.0	
12556448481	8	61.7	38.5	
12556450501	10	66.5	41.2	☐ White
12556452521	12	70.5	44.8	
12556454541	14	76.3	49.1	
12556456561	16	79.2	52.1	
12556459591	19	84.4	55.7	

Cat. No.	Tube ID inch	L mm	L1 mm	Color
12356402021	5/32"	39.4	24.3	
12356403031	3/16"	50.6	30.9	
12356404041	1/4"	55.2	31.8	
12356405051	5/16"	55.2	31.8	
12356406061	3/8"	66.5	41.4	☐ White
12356408081	1/2"	70.8	45.0	
12356409091	9/16"	76.3	49.1	
12356410101	5/8"	78.7	51.4	
12356412121	3/4"	83.8	55.9	

Note: Packing 25 unit

Reducing T Hose Connector



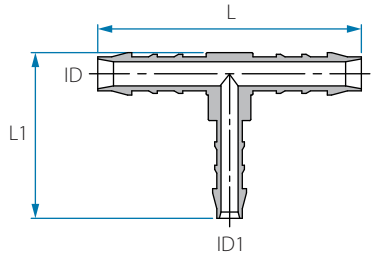

Cat. No.	Tube ID mm	Tube ID1 mm	L mm	L1 mm	Color
12557245441	5	4	50.7	25.7	
12557246451	6	5	55.7	31.8	
12557248461	8	6	61.5	36.2	
12557250481	10	8	66.5	39.3	☐ White
12557252501	12	10	70.6	44.5	
12557254521	14	12	76.7	44.5	
12557256541	16	14	79.5	51.1	
12357259561	19	16	84.6	55.4	

Cat. No.	Tube ID inch	Tube ID1 inch	L mm	L1 mm	Color
12357203021	3/16"	5/32"	50.6	25.9	
12357204031	1/4"	3/16"	55.8	32.0	
12357205041	5/16"	1/4"	61.5	36.2	
12357206051	3/8"	5/16"	66.5	39.3	☐ White
12357208061	1/2"	3/8"	70.3	43.5	
12357209081	9/16"	1/2"	76.3	48.0	
12357210091	5/8"	9/16"	79.4	51.0	
12357212101	3/4"	5/8"	84.3	55.2	

Note: Packing 25 unit

PVDF Fittings

PVDF

Working pressure
Up to 14 BAR
(200 psi) at 20 °C

Temperature
(-)20 - 120 °C
(subject to application)

Fittings' dimensions
refer to tube ID or OD, with respect to the common application



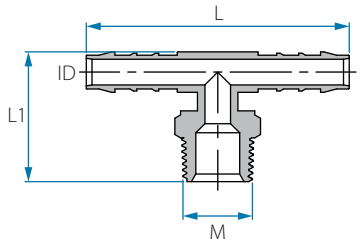

BSPT Male Branch T Hose Connector

Cat. No.	Tube ID mm	M (BSPT)	L mm	L1 mm	Color
12557144021	4	⅛"	39.4	22.2	
12557144041	4	¼"	45.2	27.0	
12557145021	5	⅛"	50.9	23.8	
12557145041	5	¼"	56.5	29.6	
12557146021	6	⅛"	55.8	24.8	
12557146041	6	¼"	63.1	30.0	
12557146061	6	⅜"	63.1	30.0	
12557146081	6	½"	63.1	33.8	
12557148021	8	⅛"	61.7	27.3	
12557148041	8	¼"	72.7	33.1	
12557148061	8	⅜"	72.7	33.1	
12557148081	8	½"	61.8	33.9	
12557150041	10	¼"	78.7	34.1	
12557150061	10	⅜"	78.7	34.1	☐ White
12557150081	10	½"	78.9	38.1	
12557150121	10	¾"	78.9	39.1	
12557152041	12	¼"	82.7	35.2	
12557152061	12	⅜"	82.7	35.2	
12557152081	12	½"	82.6	39.1	
12557152121	12	¾"	82.6	40.0	
12557154061	14	⅜"	85.6	38.5	
12557154081	14	½"	85.6	42.1	
12557154121	14	¾"	85.6	43.3	
12557156081	16	½"	88.2	45.0	
12557156121	16	¾"	88.5	46.3	
12557159081	19	½"	90.3	46.3	
12557159121	19	¾"	90.7	47.7	

Note: Packing 25 unit

NPT Male Branch T Hose Connector



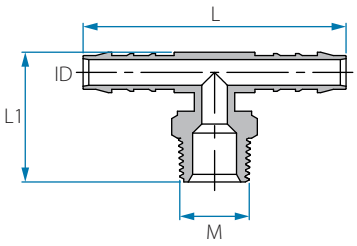

Cat. No.	Tube ID inch	M (NPT)	L mm	L1 mm	Color
12357102021	5/32"	1/8"	45.1	26.0	
12357102041	5/32"	1/4"	45.1	30.7	
12357103021	3/16"	1/8"	56.3	28.6	
12357103041	3/16"	1/4"	56.3	33.4	
12357103081	3/16"	1/2"	56.3	39.3	
12357104021	1/4"	1/8"	63.0	29.4	
12357104041	1/4"	1/4"	63.0	33.8	
12357104061	1/4"	3/8"	63.0	33.7	
12357104081	1/4"	1/2"	63.0	40.3	
12357105021	5/16"	1/8"	72.5	32.3	
12357105041	5/16"	1/4"	72.5	36.8	
12357105061	5/16"	3/8"	72.5	36.9	
12357105081	5/16"	1/2"	72.5	42.8	
12357106041	3/8"	1/4"	78.5	38.0	☐ White
12357106061	3/8"	3/8"	78.5	37.7	
12357106081	3/8"	1/2"	78.5	44.0	
12357106121	3/8"	3/4"	78.5	43.8	
12357108041	1/2"	1/4"	82.6	39.3	
12357108061	1/2"	3/8"	82.6	38.8	
12357108081	1/2"	1/2"	82.6	45.5	
12357108121	1/2"	3/4"	82.6	45.5	
12357109061	9/16"	3/8"	85.2	42.6	
12357109081	9/16"	1/2"	85.2	48.3	
12357109121	9/16"	3/4"	85.2	48.3	
12357110081	5/8"	1/2"	88.4	51.5	
12357110121	5/8"	3/4"	88.4	51.1	
12357112081	3/4"	1/2"	90.5	53.0	
12357112121	3/4"	3/4"	90.5	52.5	

Note: Packing 25 unit

PVDF Fittings

PVDF

Working pressure
Up to 14 BAR
(200 psi) at 20 °C

Temperature
(-)20 - 120 °C
(subject to application)

Fittings' dimensions
refer to tube ID or OD, with respect to the common application

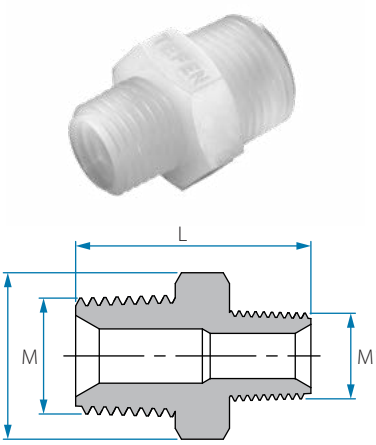

BSPT Pipe Reducing Nipple

Cat. No.	M (BSPT)	M1 (BSPT)	L mm	SW	Color
12052304021	¼"	⅛"	25.2	14	
12052306021	⅜"	⅛"	27.1	17	
12052308021	½"	⅛"	29.3	22	☐ White
12052306041	⅜"	¼"	28.5	17	
12052308041	½"	¼"	31.5	22	
12052308061	½"	⅜"	31.8	22	
12052312081	¾"	½"	34.7	27	

Note: Packing 25 unit

NPT Pipe Reducing Nipple

Cat. No.	M (NPT)	M1 (NPT)	L mm	SW	Color
12062304021	¼"	⅛"	28.4	14	
12062306021	⅜"	⅛"	29.6	17	
12062308021	½"	⅛"	34.9	22	
12062312021	¾"	⅛"	35.4	27	
12062306041	⅜"	¼"	33.4	17	☐ White
12062308041	½"	¼"	38.7	22	
12062312041	¾"	¼"	39.4	27	
12062308061	½"	⅜"	39.1	22	
12062312061	¾"	⅜"	39.6	27	
12062312081	¾"	½"	44.1	27	

Note: Packing 25 unit

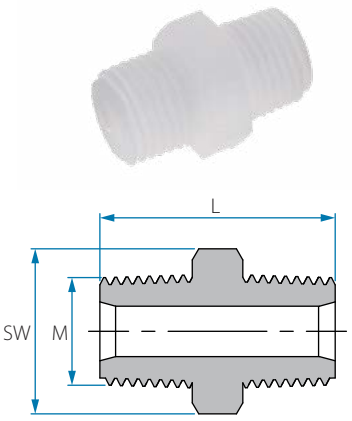

BSPT Pipe Hex Nipple

Cat. No.	M (BSPT)	L mm	SW	Color
12052202021	⅛"	22.9	11	
12052204041	¼"	28.2	15	☐ White
12052206061	⅜"	27.7	17	
12052208081	½"	34	22	

Note: Packing 25 unit

NPT Pipe Hex Nipple

Cat. No.	M (NPT)	L mm	SW	Color
12062202021	⅛"	23.7	11	
12062204041	¼"	32.3	14	
12062206061	⅜"	34.4	17	☐ White
12062208081	½"	43.3	22	
12062212121	¾"	43.9	27	

Note: Packing 25 unit



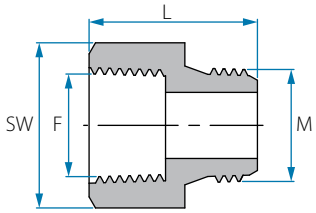

BSPT Pipe Adaptor

Cat. No.	F (BSPT)	M (BSPT)	L mm	SW	Color
12052002021	⅛"	⅛"	23.0	14	
12052002041	⅛"	¼"	23.0	14	
12052002061	⅛"	⅜"	24.0	14	
12052002081	⅛"	½"	26.9	14	
12052004021	¼"	⅛"	22.1	17	
12052004041	¼"	¼"	24.0	17	
12052004061	¼"	⅜"	24.8	17	
12052004081	¼"	½"	27.2	17	☐ White
12052006021	⅜"	⅛"	23.1	22	
12052006041	⅜"	¼"	25.2	22	
12052006061	⅜"	⅜"	25.7	22	
12052006081	⅜"	½"	28.2	22	
12052008021	½"	⅛"	25.6	26	
12052008041	½"	¼"	27.3	26	
12052008061	½"	⅜"	28.0	26	
12052008081	½"	½"	30.6	26	

Note: Packing 25 unit

NPT Pipe Adaptor

Cat. No.	F (NPT)	M (NPT)	L mm	SW	Color
12062002021	⅛"	⅛"	23.4	14	
12062002041	⅛"	¼"	23.4	14	
12062002061	⅛"	⅜"	27.4	14	
12062002081	⅛"	½"	32.5	14	
12062004021	¼"	⅛"	26.5	17	
12062004041	¼"	¼"	30.7	17	
12062004061	¼"	⅜"	30.5	17	
12062004081	¼"	½"	35.5	17	☐ White
12062006021	⅜"	⅛"	26.3	22	
12062006041	⅜"	¼"	26.5	22	
12062006061	⅜"	⅜"	30.4	22	
12062006081	⅜"	½"	35.5	22	
12062008021	½"	⅛"	30.0	26	
12062008041	½"	¼"	34.0	26	
12062008061	½"	⅜"	36.6	26	
12062008081	½"	½"	39.0	26	

Note: Packing 25 unit

Fittings Products

PVDF Fittings

PVDF

Working pressure
Up to 14 BAR
(200 psi) at 20 °C

Temperature
(-)20 - 120 °C
(subject to application)

Fittings' dimensions
refer to tube ID or OD, with respect to the common application

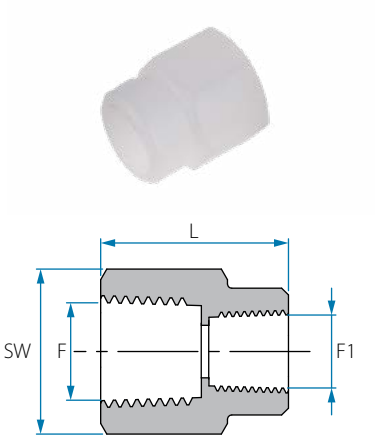

BSPT Pipe Reducing Coupling

Cat. No.	F (BSPT)	F1 (BSPT)	L mm	SW	Color
12051904021	¼"	⅛"	22.0	17	
12051906021	⅜"	⅛"	24.2	21	
12051906041	⅜"	¼"	24.2	21	
12051908041	½"	¼"	27.0	26	☐ White
12051908061	½"	⅜"	27.0	26	
12051912041	¾"	¼"	29.7	35	
12051912081	¾"	½"	34.6	35	

Note: Packing 25 unit

NPT Pipe Reducing Coupling

Cat. No.	F (NPT)	F1 (NPT)	L mm	SW	Color
12061904021	¼"	⅛"	22.0	17	
12061906021	⅜"	⅛"	24.2	22	
12061906041	⅜"	¼"	24.8	22	☐ White
12061908041	½"	¼"	27.0	26	
12061908061	½"	⅜"	26.8	26	

Note: Packing 25 unit

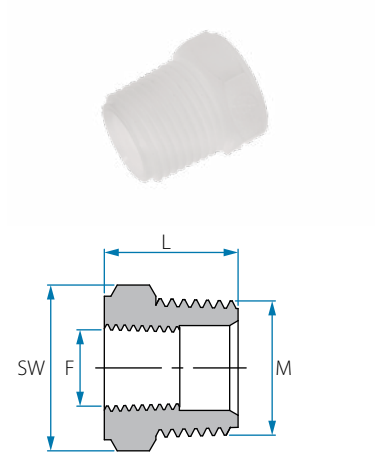

BSPT Pipe Bushing

Cat. No.	M (BSPT)	F (BSPT)	L mm	SW	Color
12051004021	¼"	⅛"	17.2	14	
12051006021	⅜"	⅛"	17.8	17	
12051006041	⅜"	¼"	17.8	17	
12051008021	½"	⅛"	20.4	22	
12051008041	½"	¼"	20.4	22	☐ White
12051008061	½"	⅜"	20.7	22	
12051012041	¾"	¼"	22	27	
12051012061	¾"	⅜"	22.2	27	
12051012081	¾"	½"	22.2	27	

Note: Packing 25 unit

NPT Pipe Bushing

Cat. No.	M (NPT)	F (NPT)	L mm	SW	Color
12061004021	¼"	⅛"	21.0	14	
12061006021	⅜"	⅛"	20.8	18	
12061006041	⅜"	¼"	20.8	18	
12061008021	½"	⅛"	26.8	24	
12061008041	½"	¼"	27.2	24	☐ White
12061008061	½"	⅜"	27.1	24	
12061012041	¾"	¼"	27.0	29	
12061012061	¾"	⅜"	27.2	29	
12061012081	¾"	½"	27.1	29	

Note: Packing 25 unit

BSPT Female Pipe Coupling



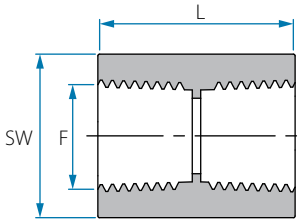

Cat. No.	F (BSPT)	L mm	SW	Color
12050302021	⅛"	19.8	14	
12050304041	¼"	23.3	17	
12050306061	⅜"	24.5	21	☐ White
12050308081	½"	29.3	26	
12050312121	¾"	37.7	34	

Note: Packing 25 unit

NPT Female Pipe Coupling

Cat. No.	F (NPT)	L mm	SW	Color
12060302021	⅛"	19.7	14	
12060304041	¼"	23.3	17	☐ White
12060306061	⅜"	24.6	21	
12060308081	½"	29.2	26	

Note: Packing 25 unit

BSPT Threaded Elbow



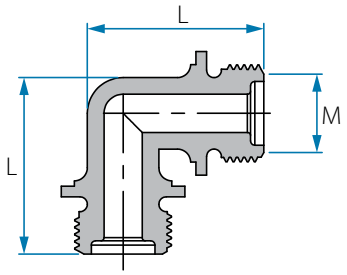

Cat. No.	M (BSPT)	L mm	Color
12056502001	⅛"	24.4	
12056504001	¼"	26.4	☐ White
12056506001	⅜"	31.8	
12056508001	½"	40.2	

Note: Packing 25 unit

NPT Threaded Elbow

Cat. No.	M (NPT)	L mm	Color
12066502001	⅛"	23.8	☐ White
12066504001	¼"	28.4	

Note: Packing 25 unit

Fittings Products

PVDF Fittings

PVDF

Working pressure
Up to 14 BAR
(200 psi) at 20 °C

Temperature
(-)20 - 120 °C
(subject to application)

Fittings' dimensions
refer to tube ID or OD, with respect to the common application



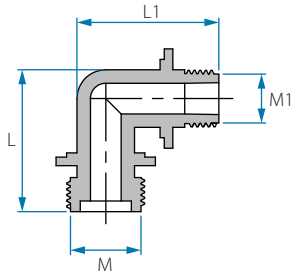

BSPT Reducing Threaded Elbow

Cat. No.	M (BSPT)	M1 (BSPT)	L mm	L1 mm	Color
12056904021	¼"	⅛"	26.4	24.4	
12056906041	⅜"	¼"	31.8	31.5	☐ White
12056908061	½"	⅜"	40.0	38.1	

Note: Packing 25 unit

NPT Reducing Threaded Elbow

Cat. No.	M (NPT)	M1 (NPT)	L mm	L1 mm	Color
12066904021	¼"	⅛"	28.4	24.0	☐ White

Note: Packing 25 unit



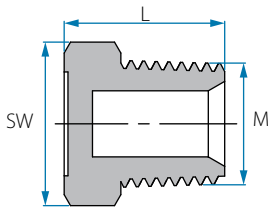

BSPT Hex Threaded Plug

Cat. No.	M (BSPT)	L mm	SW	Color
12052102001	⅛"	13.5	12	
12052104001	¼"	16.3	15	
12052106001	⅜"	16.0	18	☐ White
12052108001	½"	19.6	22	
12052112001	¾"	22.0	27	
12052116001	1"	27.0	36	

Note: Packing 25 unit

NPT Hex Threaded Plug

Cat. No.	M (NPT)	L mm	SW	Color
12062102001	⅛"	14.7	11	
12062104001	¼"	19.4	14	☐ White
12062106001	⅜"	20.4	17	
12062108001	½"	25.6	22	

Note: Packing 25 unit



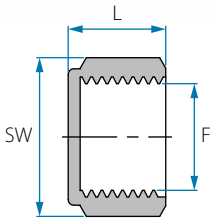

BSPT Pipe Cap

Cat. No.	F (BSPT)	L mm	SW	Color
12050802001	⅛"	10.4	13	
12050804001	¼"	14.2	17	
12050806001	⅜"	14.2	20	☐ White
12050808001	½"	17.1	24	
12050812001	¾"	17.1	30	

Note: Packing 25 unit



BSPT Threaded T Connector

Cat. No.	M (BSPT)	L mm	L1 mm	Color
12056402001	⅛"	39.8	24.1	
12056404001	¼"	44.0	26.2	☐ White
12056406001	⅜"	50.5	32.0	
12056408001	½"	64.0	40.3	

Note: Packing 25 unit

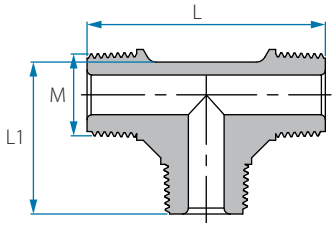

NPT Threaded T Connector

Cat. No.	M (NPT)	L mm	L1 mm	Color
12066402001	⅛"	39.3	24.0	☐ White
12066404001	¼"	48.4	28.5	

Note: Packing 25 unit

Fittings Products

PVDF

Working pressure
Up to 14 BAR
(200 psi) at 20 °C

Temperature
(-)20 - 120 °C
(subject to application)

Fittings' dimensions
refer to tube ID or OD, with respect to the common application



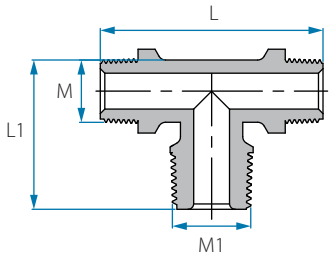

BSPT Reducing Threaded T

Cat. No.	M (BSPT)	M1 (BSPT)	L mm	L1 mm	Color
12057102041	⅛"	¼"	39.7	26.4	☐ White
12057104021	¼"	⅛"	43.3	24.2	
12057104061	¼"	⅜"	38.2	43.3	
12057106041	⅜"	¼"	60.2	26.4	
12057108061	½"	⅜"	64.2	38.2	
12057106081	⅜"	½"	60.2	40.4	

Note: Packing 25 unit

NPT Reducing Threaded T

Cat. No.	M (NPT)	M1 (NPT)	L mm	L1 mm	Color
12067104021	¼"	⅛"	48.4	24.0	☐ White

Note: Packing 25 unit



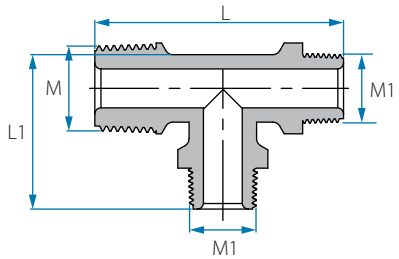

BSPT Reducing Threaded Run T

Cat. No.	M (BSPT)	M1 (BSPT)	L mm	L1 mm	Color
12057204021	¼"	⅛"	41.8	26.3	☐ White
12057206041	⅜"	¼"	48.3	30.8	
12057208061	½"	⅜"	62.0	40.0	
12057202041	⅛"	¼"	42.7	25.5	
12057204061	¼"	⅜"	48.5	31.0	
12057206081	⅜"	½"	62.0	38.2	

Note: Packing 25 unit

NPT Reducing Threaded Run T

Cat. No.	M (NPT)	M1 (NPT)	L mm	L1 mm	Color
12067204021	¼"	⅛"	41.8	26.3	☐ White

Note: Packing 25 unit

TIGHT PUSH

Tefen tight push fittings are mechanical compression fittings that can operate with plastic tubes in the range between 3⁄16"-½", 4-120mm.
The fittings sealing mechanism is based on an external NBR oring that seals the tube around it's Outside Diameter.

This type of mechanism, ensures a full bore passage, for low pressure loss, as well as smooth and uninterrupted internal flow of liquids and air.

RoHS compliant

REACH COMPLIANT

TSCA Compliant


P. 36


P. 36


P. 37


P. 37


P. 38


P. 39


P. 40


P. 40


P. 41

Fittings Products

Tight Push

Acetal

Working pressure
Up to 14 BAR
(200 psi) at 20 °C

Temperature
(-)20 - 90 °C
(subject to application)



Union Connector

Cat. No.	Tube OD mm	SW	Color
22006244002	4	14	
22006246002	6	15	
22006248002	8	16	■ Black
22006250002	10	19	
22006252002	12	22	

Cat. No.	Tube OD inch	SW	Color
22006203002	3/16"	14	
22006204002	1/4"	15	
22006205002	5/16"	16	■ Black
22006206002	3/8"	19	
22006208002	1/2"	22	

Note: Packing 25 unit
* Minimum order 500 pcs



Reducing Connector

Cat. No.	Tube OD mm	Tube OD2 mm	SW	Color
22005646442	6	4	15	
22005648442	8	4	17	
22005648462	8	6	17	
22005650462	10	6	19	■ Black
22005650482	10	8	19	
22005652482	12	8	22	
22005652502	12	10	22	

Cat. No.	Tube OD inch	Tube OD2 inch	SW	Color
22005604032	1/4"	3/16"	15	
22005605032	5/16"	3/16"	17	
22005605042	5/16"	1/4"	17	
22005606042	3/8"	1/4"	19	■ Black
22005606052	3/8"	5/16"	19	
22005608052	1/2"	5/16"	22	
22005608062	1/2"	3/8"	22	

Note: 25 Units per Package
* Minimum order 500 pcs

Union Elbow



Cat. No.	Tube OD mm	Color
22006544002	4	
22006546002	6	
22006548002	8	■ Black
22006550002	10	
22006552002	12	

Cat. No.	Tube OD inch	Color
22006503002	3/16"	
22006504002	1/4"	
22006505002	5/16"	■ Black
22006506002	3/8"	
22006508002	1/2"	

Note: Packing 25 unit
* Minimum order 500 pcs

Male Elbow



Cat. No.	Tube OD mm	M (BSPT)	Color
22006944022	4	1/8"	
22006944042	4	1/4"	
22006946022	6	1/8"	
22006946042	6	1/4"	
22006948022	8	1/8"	
22006948042	8	1/4"	■ Black
22006950042	10	1/4"	
22006950062	10	3/8"	
22006952062	12	3/8"	
22006952082	12	1/2"	

Cat. No.	Tube OD inch	M (BSPT)	Color
22006903022	3/16"	1/8"	
22006903042	3/16"	1/4"	
22006904022	1/4"	1/8"	
22006904042	1/4"	1/4"	
22006905022	5/16"	1/8"	
22006905042	5/16"	1/4"	■ Black
22006906042	3/8"	1/4"	
22006906062	3/8"	3/8"	
22006908062	1/2"	3/8"	
22006908082	1/2"	1/2"	

Note: Packing 25 unit
* Minimum order 500 pcs

Tight Push

Acetal

Working pressure
Up to 14 BAR
(200 psi) at 20 °C

Temperature
(-)20 - 90 °C
(subject to application)



BSPT Male Connector

Cat. No.	Tube OD mm	M (BSPT)	SW	Color
22006844022	4	⅛"	14	
22006844042	4	¼"	14	
22006846022	6	⅛"	15	
22006846042	6	¼"	15	
22006848022	8	⅛"	16	■ Black
22006848042	8	¼"	16	
22006850042	10	¼"	19	
22006850062	10	⅜"	19	
22006852062	12	⅜"	22	
22006852082	12	½"	22	

Cat. No.	Tube OD inch	M (BSPT)	SW	Color
22006803022	3/16"	⅛"	14	
22006803042	3/16"	¼"	14	
22006804022	¼"	⅛"	15	
22006804042	¼"	¼"	15	
22006805022	5/16"	⅛"	16	■ Black
22006805042	5/16"	¼"	16	
22006806042	⅜"	¼"	19	
22006806062	⅜"	⅜"	19	
22006808062	½"	⅜"	22	
22006808082	½"	½"	22	

Note: Packing 25 unit
* Minimum order 500 pcs



BSPT Female Connector

Cat. No.	Tube OD mm	F (BSPT)	SW	Color
22006644022	4	⅛"	15	
22006644042	4	¼"	17.5	
22006646022	6	⅛"	15	
22006646042	6	¼"	17	
22006648022	8	⅛"	17	
22006648042	8	¼"	17	
22006648062	8	⅜"	17	
22006648082	8	½"	17	■ Black
22006650022	10	⅛"	19	
22006650042	10	¼"	19	
22006650062	10	⅜"	19.5	
22006650082	10	½"	19.5	
22006652062	12	⅜"	22.5	
22006652082	12	½"	24	

Cat. No.	Tube OD inch	F (BSPT)	SW	Color
22006603022	3/16"	⅛"	15	
22006603042	3/16"	¼"	17.5	
22006604022	¼"	⅛"	15.5	
22006604042	¼"	¼"	17.5	
22006605022	5/16"	⅛"	17	
22006605042	5/16"	¼"	17	
22006605062	5/16"	⅜"	17	
22006605082	5/16"	½"	17	■ Black
22006606022	⅜"	⅛"	19	
22006606042	⅜"	¼"	19	
22006606062	⅜"	⅜"	19	
22006606082	⅜"	½"	19	
22006608062	½"	⅜"	22	
22006608082	½"	½"	26	

Note: Packing 25 unit
* Minimum order 500 pcs

Fittings Products

Tight Push

Acetal

Working pressure
Up to 14 BAR
(200 psi) at 20 °C

Temperature
(-)20 - 90 °C
(subject to application)



Union T Connector

Cat. No.	Tube OD mm	Color
22006444442	4	
22006446462	6	
22006448482	8	Black
22006450502	10	
22006452522	12	

Cat. No.	Tube OD inch	Color
22006403032	3/16"	
22006404042	1/4"	
22006405052	5/16"	Black
22006406062	3/8"	
22006408082	1/2"	

Note: Packing 25 unit
* Minimum order 500 pcs



Male Branch T

Cat. No.	Tube OD mm	M (BSPT)	Color
22007144022	4	1/8"	
22007144042	4	1/4"	
22007146022	6	1/8"	
22007146042	6	1/4"	
22007148022	8	1/8"	Black
22007148042	8	1/4"	
22007150042	10	1/4"	
22007150062	10	3/8"	
22007152062	12	3/8"	
22007152082	12	1/2"	

Cat. No.	Tube O inch D	M (BSPT)	Color
22007103022	3/16"	1/8"	
22007103042	3/16"	1/4"	
22007104022	1/4"	1/8"	
22007104042	1/4"	1/4"	
22007105022	5/16"	1/8"	Black
22007105042	5/16"	1/4"	
22007106042	3/8"	1/4"	
22007106062	3/8"	3/8"	
22007108062	1/2"	3/8"	
22007108082	1/2"	1/2"	

Note: Packing 25 unit
* Minimum order 500 pcs



Male Run T

Cat. No.	Tube OD mm	M (BSPT)	Color
22007244022	4	⅛"	
22007244042	4	¼"	
22007246022	6	⅛"	
22007246042	6	¼"	
22007248022	8	⅛"	
22007248042	8	¼"	■ Black
22007250042	10	¼"	
22007250062	10	⅜"	
22007252062	12	⅜"	
22007252082	12	½"	

Cat. No.	Tube OD inch	M (BSPT)	Color
22007203022	3/16"	⅛"	
22007203042	3/16"	¼"	
22007204022	¼"	⅛"	
22007204042	¼"	¼"	
22007205022	5/16"	⅛"	
22007205042	5/16"	¼"	■ Black
22007206042	⅜"	¼"	
22007206062	⅜"	⅜"	
22007208062	½"	⅜"	
22007208082	½"	½"	

Note: Packing 25 unit
* Minimum order 500 pcs

BARB BLOCK

Tefen barb Block fittings are mechanical PUSH-ON compression fittings that can operate with numerus types of plastic tubes in the range between ¼"-½", 6-12mm. The fittings sealing mechanism is based on a barb and tightening nut.
How to use: Insert the nut onto the tube, insert the tube onto the barb and then secure the nut tightly on the barb support thread.

Main use: connection of plastic tubes of hydraulic and pneumatic systems.
Main Advantages: high chemical resistant, durable resistant for tube pullout, no rubber seals - long service life without leaks.

Food Contact (EU) 1935/2004
For blue Polypropylene only

RoHS compliant

REACH COMPLIANT

TSCA Compliant
For blue & black Polypropylene only


P. 43


P. 43


P. 44


P. 45


P. 46


P. 47


P. 47


P. 47


P. 48


P. 49


P. 49


P. 50


P. 50


P. 51


P. 51


P. 52

Reinforced Polypropylene

Working pressure
Up to 14 BAR
(200 psi) at 20 °C

Temperature
4 - 90 °C
(subject to application)

Fittings' dimensions
refer to tube ID or OD, with respect to the common application



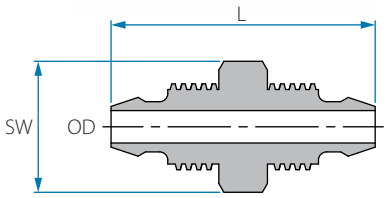

Union Connector

Cat. No.	Tube OD mm	L mm	SW	Color
22046246008	6	32.7	14	
22046248008	8	32.7	14	Blue
22046252008	12	40.6	19	

Cat. No.	Tube OD inch	L mm	SW	Color
22046204008	¼"	32.7	14	
22046205008	5/16"	32.7	14	Navy Blue
22046208008	½"	40.6	19	

Cat. No.	Tube OD inch	L mm	SW	Color
22246204003	¼"	32.5	14	
22246205003	5/16"	32.6	14	Grey
22246208003	½"	40.4	19	

Note: Packing 25 unit



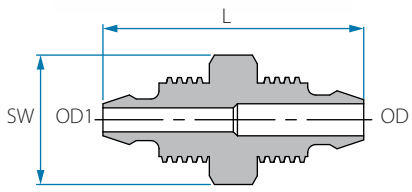

Reducing Connector

Cat. No.	Tube OD mm	Tube OD1 mm	L mm	SW	Color
22045648468	8	6	32.7	14	Blue

Cat. No.	Tube OD inch	Tube OD1 inch	L mm	SW	Color
22045605048	5/16	¼"	32.7	14	Navy Blue
22245605043	5/16	¼"	32.7	14	Grey

Note: Packing 25 unit

Fittings Products

Barb Block

Reinforced Polypropylene

Working pressure
Up to 14 BAR
(200 psi) at 20 °C

Temperature
4 - 90 °C
(subject to application)

Fittings' dimensions
refer to tube ID or OD, with respect to the common application



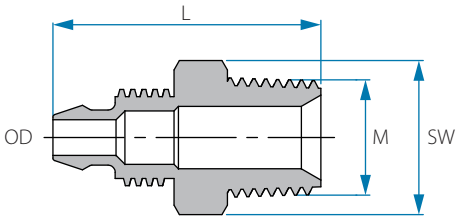

BSPT Male Connector

Cat. No.	Tube OD mm	M (BSPT)	L mm	SW	Color
22046846028	6	⅛"	27.5	13	
22046846048	6	¼"	29.7	14	
22046846068	6	⅜"	32.5	17	
22046846088	6	½"	35.5	22	
22046846128	6	¾"	36.6	27	
22046848028	8	⅛"	27.6	13	
22046848048	8	¼"	29.5	14	
22046848068	8	⅜"	31.4	17	
22046848088	8	½"	36.1	22	
22046848128	8	¾"	36.6	27	Blue
22046850048	10	¼"	35.8	17	
22046850068	10	⅜"	35.8	17	
22046850088	10	½"	38.9	22	
22046850128	10	¾"	39.7	27	
22046852048	12	¼"	37.3	14	
22046852068	12	⅜"	37.3	17	
22046852088	12	½"	40.1	22	
22046852128	12	¾"	40.1	27	
22046848022	8	⅛"	27.6	13	
22046852082	12	½"	40.1	22	
22046846042	6	¼"	29.7	14	
22046848042	8	¼"	29.5	14	Black
22046848062	8	⅜"	31.4	17	
22046852042	12	¼"	37.3	14	
22046852062	12	⅜"	37.3	17	

Cat. No.	Tube OD inch	M (BSPT)	L mm	SW	Color
22046804028	¼"	⅛"	27.5	13	
22046804048	¼"	¼"	29.7	15	
22046804068	¼"	⅜"	32.5	17	
22046804088	¼"	½"	35.5	22	
22046804128	¼"	¾"	36.6	27	
22046805028	5/16"	⅛"	27.6	13	
22046805048	5/16"	¼"	29.5	14	
22046805068	5/16"	⅜"	31.4	17	Navy Blue
22046806048	⅜"	¼"	35.8	17	
22046806068	⅜"	⅜"	35.8	17	
22046806088	⅜"	½"	38.9	22	
22046806128	⅜"	¾"	39.7	27	
22046808048	½"	¼"	37.3	17	
22046808068	½"	⅜"	37.3	17	
22046808088	½"	½"	40.1	22	
22046808128	½"	¾"	40.1	27	
22046804041	¼"	¼"	29.7	15	
22046804081	¼"	½"	35.5	22	White
22046804121	¼"	¾"	36.6	27	

Note: Packing 25 unit

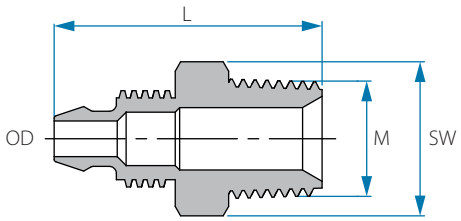

NPT Male Connector

Cat. No.	Tube OD inch	M (NPT)	L mm	SW	Color
22246804023	¼"	⅛"	29.4	11	
22246804043	¼"	¼"	34.0	14	
22246804063	¼"	⅜"	35.1	17	
22246804083	¼"	½"	40.2	22	
22246804123	¼"	¾"	41.0	27	
22246805023	5⁄16"	⅛"	29.4	11	
22246805043	5⁄16"	¼"	34.0	14	
22246805063	5⁄16"	⅜"	35.1	17	
22246805083	5⁄16"	½"	40.2	22	Grey
22246805123	5⁄16"	¾"	41.1	27	
22246806043	⅜"	¼"	37.6	14	
22246806063	⅜"	⅜"	38.6	17	
22246806083	⅜"	½"	43.7	22	
22246806123	⅜"	¾"	44.4	27	
22246808043	½"	¼"	38.8	14	
22246808063	½"	⅜"	40.0	17	
22246808083	½"	½"	45.0	22	
22246808123	½"	¾"	45.7	27	

Note: Packing 25 unit

Barb Block

Reinforced Polypropylene

Working pressure
Up to 14 BAR
(200 psi) at 20 °C

Temperature
4 - 90 °C
(subject to application)

Fittings' dimensions
refer to tube ID or OD, with respect to the common application



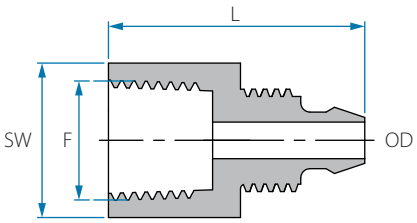

BSPT Female Connector

Cat. No.	Tube OD mm	F (BSPT)	L mm	SW	Color
22046646028	6	⅛"	26.3	14	
22046646048	6	¼"	27.8	17	
22046648028	8	⅛"	26.3	14	
22046648048	8	¼"	28.0	17	
22046648068	8	⅜"	30.6	22	
22046648088	8	½"	32.5	26	Blue
22046648548	8	M14X1.5	28.1	17	
22046650048	10	¼"	31.7	17	
22046650068	10	⅜"	33.0	22	
22046650088	10	½"	35.4	26	

Cat. No.	Tube OD inch	F (BSPT)	L mm	SW	Color
22046604028	¼"	⅛"	26.3	14	
22046604048	¼"	¼"	27.8	17	
22046605028	5/16"	⅛"	26.3	14	
22046605048	5/16"	¼"	28.0	17	
22046605068	5/16"	⅜"	30.6	22	Navy Blue
22046605088	5/16"	½"	32.5	26	
22046606048	⅜"	¼"	31.7	17	
22046606068	⅜"	⅜"	33.0	22	
22046606088	⅜"	½"	35.4	26	

Note: Packing 25 unit

NPT Female Connector

Cat. No.	Tube OD inch	F (NPT)	L mm	SW	Color
22246604023	¼"	⅛"	26.3	14	
22246605023	5/16"	⅛"	26.3	14	
22246605043	5/16"	¼"	32.1	17	Grey
22246606043	⅜"	¼"	34.5	17	
22246606063	⅜"	⅜"	34.5	22	
22246606083	⅜"	½"	38.0	27	

Note: Packing 25 unit

Union Elbow



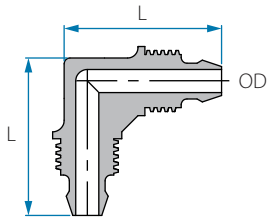

Cat. No.	Tube OD mm	L mm	Color
22046546008	6	27.4	
22046548008	8	27.4	Blue
22046552008	12	40.5	
22046548002	8	27.4	Black

Cat. No.	Tube OD inch	L mm	Color
22046504008	¼"	27.4	
22046505008	5/16"	27.4	Navy Blue
22046508008	½"	40.5	
22046508002	½"	40.5	Black

Note: Packing 25 unit

Cat. No.	Tube OD inch	L mm	Color
22246504003	¼"	27.5	
22246505003	5/16"	27.5	Grey
22246508003	½"	40.5	

Note: Packing 25 unit

Reducing Elbow



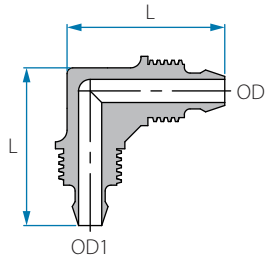

Cat. No.	Tube OD mm	Tube OD1 mm	L mm	Color
22045748468	8	6	27.3	Blue

Note: Packing 25 unit

BSPT Female Elbow



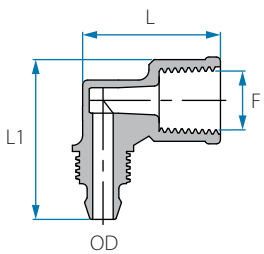

Cat. No.	Tube OD mm	F (BSPT)	L mm	L1 mm	Color
22046046028	6	⅛"	25.1	27.3	
22046046048	6	¼"	27.0	27.3	Blue
22046048048	8	¼"	27.0	27.3	
22046046022	6	⅛"	25.1	27.3	
22046046042	6	¼"	27.0	27.3	Black
22046048042	8	¼"	27.0	27.3	

Note: Packing 25 unit

Barb Block

Reinforced Polypropylene

Working pressure
Up to 14 BAR
(200 psi) at 20 °C

Temperature
4 - 90 °C
(subject to application)

Fittings' dimensions
refer to tube ID or OD, with respect to the common application



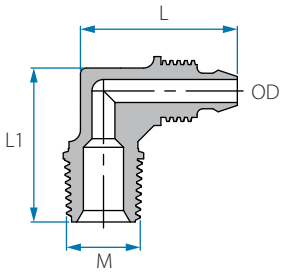

BSPT Male Elbow

Cat. No.	Tube OD mm	M (BSPT)	L mm	L1 mm	Color
22046946028	6	⅛"	27.6	22.4	Blue
22046946048	6	¼"	27.6	26.8	
22046948028	8	⅛"	27.6	26.8	
22046948048	8	¼"	27.6	26.8	
22046948068	8	⅜"	28.1	29.4	
22046952048	12	¼"	40.3	31.7	
22046952068	12	⅜"	40.3	32.0	
22046952088	12	½"	40.3	36.0	
22046946022	6	⅛"	27.6	22.4	Black
22046948022	8	⅛"	27.6	26.8	
22046946042	6	¼"	27.6	26.8	
22046948042	8	¼"	27.6	26.8	
22046948062	8	⅜"	28.1	29.4	
22046952062	12	⅜"	40.3	32	

Cat. No.	Tube OD inch	M (BSPT)	L mm	L1 mm	Color
22046904028	¼"	⅛"	27.6	22.4	Navy Blue
22046904048	¼"	¼"	27.6	26.8	
22046905028	5/16"	⅛"	27.6	26.8	
22046905048	5/16"	¼"	27.6	26.8	
22046905068	5/16"	⅜"	28.1	29.4	
22046908048	½"	¼"	40.3	31.7	
22046908068	½"	⅜"	40.3	32.0	
22046908088	½"	½"	40.3	36.0	
22046908082	½"	½"	40.3	36.0	Black
22046904041	¼"	¼"	26.7	26.8	White

Note: Packing 25 unit

NPT Male Elbow

Cat. No.	Tube OD inch	M (NPT)	L mm	L1 mm	Color
22246904023	¼"	⅛"	27.5	24.0	Grey
22246904043	¼"	¼"	27.5	29.0	
22246905023	5/16"	⅛"	27.5	24.0	
22246905043	5/16"	¼"	27.5	28.9	

Note: Packing 25 unit



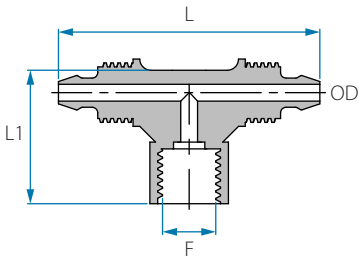

BSPT Female Branch T

Cat. No.	Tube OD mm	F (BSPT)	L mm	L1 mm	Color
22047346028	6	⅛"	46.6	25.0	Blue
22047348048	8	¼"	46.8	27.2	

Cat. No.	Tube OD inch	F (BSPT)	L mm	L1 mm	Color
22047304028	¼"	⅛"	46.6	25.0	Navy Blue
22047305048	5/16"	¼"	46.8	27.2	

Note: Packing 25 unit



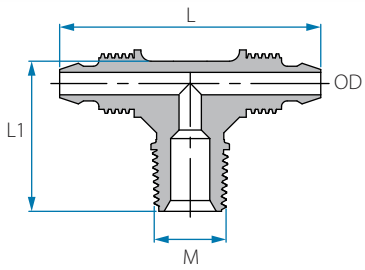

BSPT Male Branch T

Cat. No.	Tube OD mm	M (BSPT)	L mm	L1 mm	Color
22047146028	6	⅛"	46.8	22.6	Blue
22047146048	6	¼"	46.8	26.8	
22047148028	8	⅛"	46.8	22.6	
22047148048	8	¼"	46.8	26.8	
22047148068	8	⅜"	47.2	29.4	
22047152048	12	¼"	67.0	31.6	
22047152068	12	⅜"	67.0	32.0	
22047152088	12	½"	67.0	36.0	
22047146042	6	¼"	46.8	26.8	Black
22047148022	8	⅛"	46.8	22.6	
22047148042	8	¼"	46.8	26.8	

Cat. No.	Tube OD inch	M (BSPT)	L mm	L1 mm	Color
22047104028	¼"	⅛"	46.8	22.6	Navy Blue
22047104048	¼"	¼"	46.8	26.8	
22047105028	5/16"	⅛"	46.8	22.6	
22047105048	5/16"	¼"	46.8	26.8	
22047105068	5/16"	⅜"	47.2	29.4	
22047108048	½"	¼"	67.0	31.6	
22047108068	½"	⅜"	67.0	32.0	
22047104041	¼"	¼"	46.8	26.8	White

Note: Packing 25 unit

NPT Male Branch T

Cat. No.	Tube OD inch	M (NPT)	L mm	L1 mm	Color
22247104023	¼"	⅛"	47.7	24.1	Grey
22247104043	¼"	¼"	46.6	28.9	
22247105023	5/16"	⅛"	46.7	24.1	
22247108083	½"	½"	66.8	36.1	
22247105022	5/16"	⅛"	46.7	24.1	Black

Note: Packing 25 unit

Barb Block

Reinforced Polypropylene

Working pressure
Up to 14 BAR
(200 psi) at 20 °C

Temperature
4 - 90 °C
(subject to application)

Fittings' dimensions
refer to tube ID or OD, with respect to the common application

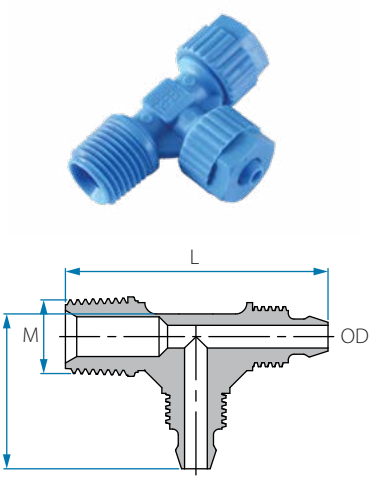

BSPT Male Run T

Cat. No.	Tube OD mm	M (BSPT)	L mm	L1 mm	Color
22047246028	6	⅛"	41.9	27.5	
22047246048	6	¼"	46.2	27.5	
22047248028	8	⅛"	41.9	27.5	
22047248048	8	¼"	46.2	27.5	
22047248068	8	⅜"	58.8	43.2	Blue
22047252048	12	¼"	57.7	40.3	
22047252068	12	⅜"	59.0	40.5	
22047252088	12	½"	62.7	40.4	

Cat. No.	Tube OD inch	M (BSPT)	L mm	L1 mm	Color
22047204028	¼"	⅛"	41.9	27.5	
22047204048	¼"	¼"	46.2	27.5	
22047205028	5⁄16"	⅛"	41.9	27.5	
22047205048	5⁄16"	¼"	46.2	27.5	
22047205068	5⁄16"	⅜"	58.8	43.2	Navy Blue
22047208048	½"	¼"	57.7	40.3	
22047208068	½"	⅜"	59.0	40.5	
22047208088	½"	½"	62.7	40.4	
22047204041	¼"	¼"	46.2	27.5	White

Note: Packing 25 unit

NPT Male Run T

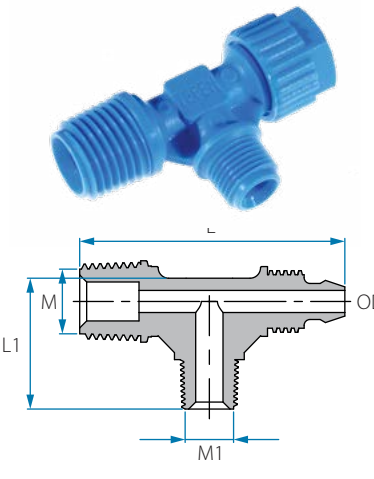

Cat. No.	Tube OD inch	M (NPT)	L mm	L1 mm	Color
22247204023	¼"	⅛"	43.4	27.4	
22247204043	¼"	¼"	48.2	27.4	
22247205023	5⁄16"	⅛"	43.5	27.4	Grey
22247205043	5⁄16"	¼"	48.3	27.4	
22247205063	5⁄16"	⅜"	56.1	40.2	

Note: Packing 25 unit

BSPT Male T - 2 threads

Cat. No.	Tube OD mm	M (BSPT)	M1 (BSPT)	L mm	L1 mm	Color
22047802048	8	¼"	⅛"	46.2	22.6	Blue

Note: Packing 25 unit

Union T



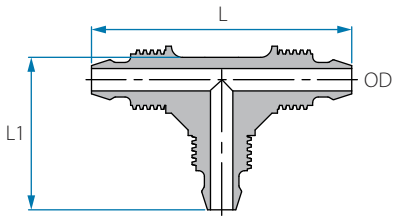

Cat. No.	OD mm	L mm	L1 mm	Color
22046446468	6	46.8	27.5	Blue
22046448488	8	46.8	27.5	
22046452528	12	67.1	40.4	

Cat. No.	OD inch	L mm	L1 mm	Color
22046404041	¼"	46.8	27.5	White
22046404048	¼"	46.8	27.5	
22046405058	5⁄16"	46.8	27.5	Navy Blue
22046408088	½"	67.1	40.4	
22046404042	¼"	46.8	27.5	Black
22046408082	½"	67.1	40.4	
22246404043	¼"	46.7	27.4	Grey
22246405053	5⁄16"	46.7	27.4	
22246408083	½"	67.0	40.4	

Note: Packing 25 unit

Reducing T



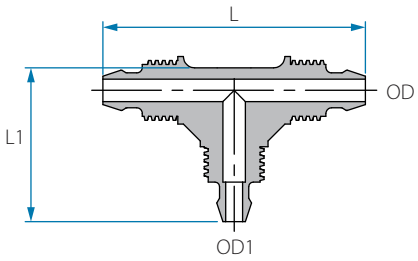

Cat. No.	Tube OD mm	Tube OD1 mm	L mm	L1 mm	Color
22045846488	6	8	46.8	27.4	Blue
22045848468	8	6	46.8	27.4	

Note: Packing 25 unit

Barb Block

Reinforced Polypropylene

Working pressure
Up to 14 BAR
(200 psi) at 20 °C

Temperature
4 - 90 °C
(subject to application)



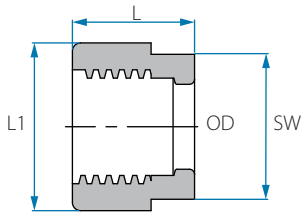

Nut for Union Connector

Cat. No.	Tube OD mm	L mm	SW	Color
32046146001	6	11.9	16	White
32046146006	6	11.9	16	Red
32046146008	6	11.9	16	Blue
32046146009	6	11.9	16	Yellow
32046148001	8	11.9	16	White
32046148006	8	11.9	16	Red
32046148008	8	11.9	16	Blue
32046150002	10	14.2	16	Black
32046150008	10	14.2	19	Blue
32046152002	12	17.5	22	Black

Cat. No.	Tube OD inch	L mm	SW	Color
32046104001	¼"	11.9	16	White
32046104002	¼"	11.9	16	Black
32046104008	¼"	11.9	16	Navy Blue
32046104009	¼"	11.9	16	Yellow
32046105008	5⁄16"	11.9	16	Navy Blue
32046105009	5⁄16"	11.9	16	Yellow
32046106008	⅜"	14.2	19	Navy Blue
32046106009	⅜"	14.2	19	Yellow
32046108001	½"	17.5	22	White
32046108002	½"	17.5	22	Black
32046108008	½"	17.5	22	Navy Blue
32046108009	½"	17.5	22	Yellow

Note: Use nuts with Tefen's barb fittings only

BARB CONNECTORS

Tefen barb connectors designed to operate with all PE tubes class 2.5-4 PN, at the range.
Can work with other flexible plastic and rubber pipes.
The Fittings and sealing mechanism are based on a barb that holds the tube from the inside diameter.

Fittings size indicate the nominal outside diameter of the tube.
For example: ⅝" barb fitting, fits a ⅝" irrigation tube class 2.5, with inner diameter of ½".

RoHS compliant

REACH COMPLIANT

TSCA Compliant

For black Polypropylene only


P. 54


P. 54


P. 55


P. 55


P. 56


P. 56


P. 57


P. 57


P. 58


P. 58


P. 59


P. 59

Barb Connectors

Polypropylene

Working pressure
Up to 14 BAR
(200 psi) at 20 °C

Temperature
4 - 90 °C
(subject to application)

Fittings' dimensions
refer to tube ID or OD, with respect to the common application



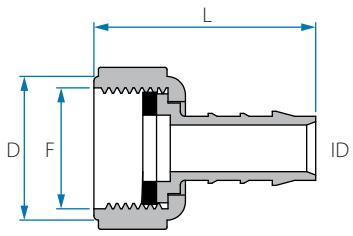

Female Record Hose Connector with Washer

Cat. No.	Tube ID mm	F (BSP)	L mm	D mm	Color
22454746122	6	¾"	37.9	33.5	
22454748122	8	¾"	41.8	33.5	
22454748162	8	1"	40.8	39.7	
22454750122	10	¾"	44.2	33.5	
22454752122	12	¾"	45	33.5	
22454752162	12	1"	43.8	39.7	■ Black
22454754122	14	¾"	46.3	33.5	
22454754162	14	1"	45.2	39.7	
22454756122	16	¾"	46.7	33.5	
22454756162	16	1"	45.6	39.7	
22454759122	19	¾"	47.5	33.5	
22454759162	19	1"	46.3	39.7	

Note: Use flat seal with this fitting



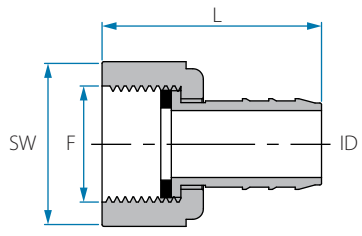

Female Record Hose Connector with Washer

Cat. No.	Tube ID mm	F (BSP)	L	SW	Color
22454750062	10	⅜"	32.8	17	■ Black
22454752082	12	½"	33.7	22	

Note: Use flat seal with this fitting



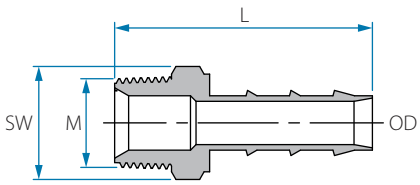

Male Straight Hose Connector

Cat. No.	Tube OD mm	M (BSPT)	L mm	SW	Color
12456812022	12	⅛"	44.0	11	
12456812042	12	¼"	47.7	14	
12456812062	12	⅜"	47.3	17	
12456812082	12	½"	50.8	22	
12456812122	12	¾"	51.4	27	
12456816042	16	¼"	47.6	14	
12456816082	16	½"	51.3	22	
12456816122	16	¾"	52.0	27	Black
12456820082	20	½"	52.2	22	
12456820122	20	¾"	54.0	27	
12456820162	20	1"	59.0	36	
12456825082	25	½"	53.3	22	
12456825122	25	¾"	54.5	27	
12456825162	25	1"	59.0	36	
*12466817083	17	½"	45.2	22	
*12466817123	17	¾"	46.1	27	Brown

Note: Packing 25 unit
* Sharp barb (material: Acetal)



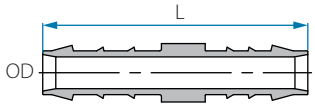

Union Hose Connector

Cat. No.	Tube OD mm	L mm	Color
12456212002	12	68.6	
12456216002	16	71.4	
12456220002	20	76.5	Black
12456225002	25	76.5	
*12466216002	16	49.0	
*12466216003	16	49.0	Brown
*12466217003	17	58.3	

Note: Packing 25 unit
* Short configuration

Barb Connectors

Polypropylene

Working pressure
Up to 14 BAR
(200 psi) at 20 °C

Temperature
4 - 90 °C
(subject to application)

Fittings' dimensions
refer to tube ID or OD, with respect to the common application



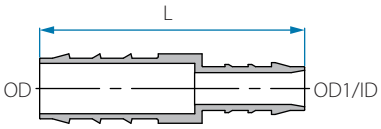

Reducing Hose Connector

Cat. No.	Tube OD mm	Tube OD1 mm	L mm	Color
12455612162	16	12	71.5	
12455612202	20	12	74.2	
12455616202	20	16	74.2	
12455620252	25	20	76.8	■ Black
*12465612172	17	12	64.1	
*12465616172	17	16	66.0	
*12465617202	20	17	68.8	

Cat. No.	Tube OD mm	Tube ID mm	L mm	Color
12455648122	12	8	63.8	
12455652202	20	12	72.6	
12455656202	20	16	75.6	■ Black
12455659202	20	19	75.4	
12455659252	25	19	75.3	

Note: Packing 25 unit
* Sharp barb (material: Acetal)



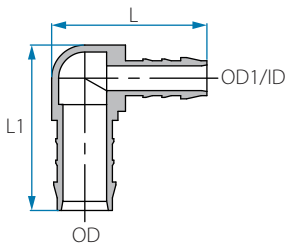

Reducing Elbow Hose Connector

Cat. No.	Tube OD mm	Tube OD1 mm	L mm	L1 mm	Color
12456612162	16	12	51.2	49.5	
12456612202	20	12	56.4	55.0	■ Black
12456616202	20	16	56.4	54.8	
12456620252	25	20	58.3	56.4	

Note: Packing 25 unit

Cat. No.	Tube OD mm	Tube ID mm	L mm	L1 mm	Color
12456652202	20	12	56.2	52.2	
12456656202	20	16	56.6	55.5	■ Black
12456659202	20	19	55.2	56.4	
12456659252	25	19	58.4	57.4	

Note: Packing 25 unit

Union Elbow Hose Connector



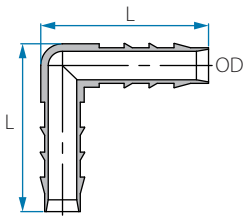

Cat. No.	Tube OD mm	L mm	Color
12456512002	12	48.2	
12456516002	16	49.6	Black
12456520002	20	56.8	
12456525002	25	58.8	
*12466516003	16	40.5	Brown
*12466517003	17	45.1	

Note: Packing 25 unit
* Sharp barb (material: Acetal)

Male Branch T Hose Connector



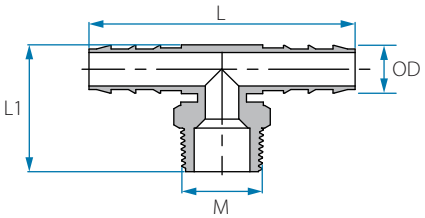

Cat. No.	Tube OD mm	M (BSPT)	L mm	L1 mm	Color
12457112042	12	¼"	84.7	34.1	
12457112062	12	⅜"	84.9	34.3	
12457112082	12	½"	84.9	38.4	
12457112122	12	¾"	84.8	38.9	
12457116062	16	⅜"	86.2	36.3	
12457116082	16	½"	86.2	40.0	Black
12457116122	16	¾"	86.2	41.0	
12457120082	20	½"	93.7	45.5	
12457120122	20	¾"	93.7	46.6	
12457125082	25	½"	93.7	47.6	
12457125122	25	¾"	93.8	48.6	
*12467117083	17	½"	74.3	41.9	Brown
*12467117123	17	¾"	74.3	43.0	

Note: Packing 25 unit
* Sharp barb (material: Acetal)

Barb Connectors

Polypropylene

Working pressure
Up to 14 BAR
(200 psi) at 20 °C

Temperature
4 - 90 °C
(subject to application)

Fittings' dimensions
refer to tube ID or OD, with respect to the common application



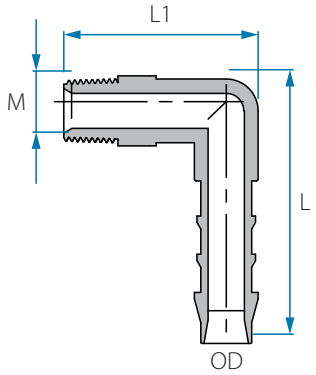

BSPT Male Elbow Hose Connector

Cat. No.	Tube OD mm	M (BSPT)	L mm	L1 mm	Color
12456912042	12	¼"	48.4	34.0	
12456912062	12	⅜"	48.4	34.7	
12456912082	12	½"	48.4	38.0	
12456912122	12	¾"	48.5	39.4	
12456916062	16	⅜"	51.1	36.2	
12456916082	16	½"	51.6	39.5	Black
12456916122	16	¾"	51.1	41.0	
12456920082	20	½"	56.3	45.0	
12456920122	20	¾"	56.0	46.8	
12456925082	25	½"	58.3	47.2	
12456925122	25	¾"	58.7	48.5	
*12466917083	17	½"	45.5	41.9	Brown
*12466917123	17	¾"	45.7	43.1	

Note: Packing 25 unit
* Sharp barb (material: Acetal)



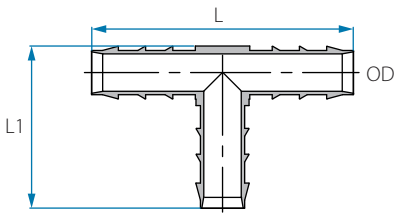

Union T Hose Connector

Cat. No.	Tube OD mm	L mm	L1 mm	Color
12456412122	12	72.7	44.6	
12456416162	16	76.7	47.7	Black
12456420202	20	84.8	54.7	
12456425252	25	72.8	44.6	
*12466416163	16	76.7	47.7	Brown
*12466417173	17	84.7	54.9	

Note: Packing 25 unit
* Sharp barb (material: Acetal)



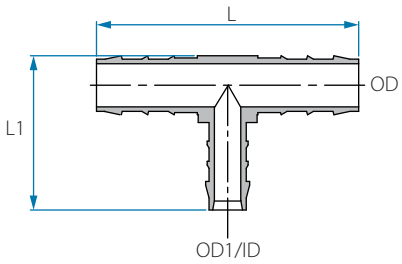

Reducing T Hose Connector

Cat. No.	Tube OD1 mm	Tube OD mm	L mm	L1 mm	Color
12457212162	12	16	76.7	48.2	
12457216202	16	20	84.6	52.3	Black
12457220252	20	25	88.7	58.6	

Note: Packing 25 unit



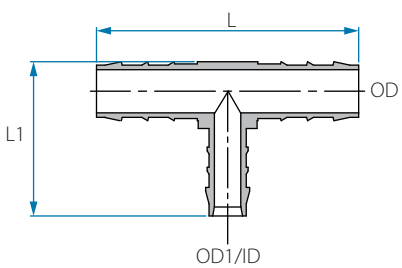

Reducing T Hose Connector

Cat. No.	Tube OD mm	Tube ID mm	L mm	L1 mm	Color
12457246162	16	6	76.8	40.6	
12457252202	20	12	84.7	55.2	Black
12457256202	20	16	84.9	53.0	
12457259202	20	19	84.7	53.0	

Note: Packing 25 unit

HOSE FITTINGS

Tefen hose fittings are the perfect choice to connect all types of flexible rubber and plastic tubes in domestic, industrial and all other general applications.

Main advantages:

- Strong and durable, high impact resistant, all sizes are true outside diameter of the fittings, and will match Nylon 6-6 inside diameter of the tube. In order to secure tube on the fitting barb, it is recommended to use Tefen's snap clip or similar metal or plastic clip.
- How to use: push the tube onto the barb all the way to the stopper.
- Secure the tube tightly with a proper size snap clip.

Food Contact FDA 21 CFR
For blue Nylon 6-6 only

Food Contact (EU) 1935/2004
For blue Nylon 6-6 only

RoHS compliant

REACH COMPLIANT

TSCA Compliant

For blue, gray & black Nylon 6-6 only


P. 61


P. 62


P. 63


P. 64


P. 65


P. 66


P. 67


P. 68


P. 68


P. 69


P. 69


P. 70


P. 70


P. 71


P. 73


P. 74


P. 75

Nylon 6-6

Working pressure
Up to 14 BAR
(200 psi) at 20 °C

Temperature
(-)20 - 110 °C
(subject to application)

Fittings' dimensions
refer to tube ID or OD, with respect to the common application



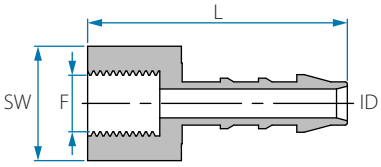

BSPT Female Connector

Cat. No.	Tube ID mm	F (BSPT)	L mm	SW	Color
12446745028	5	⅛"	34.4	14	
12446745048	5	¼"	35.2	17	
12446745068	5	⅜"	36.5	22	
12446745088	5	½"	38.7	26	
12446746028	6	⅛"	36.3	14	
12446746048	6	¼"	37.2	17	
12446746068	6	⅜"	38.3	22	
12446746088	6	½"	40.8	26	
12446748028	8	⅛"	39.4	14	
12446748048	8	¼"	39.4	17	
12446748068	8	⅜"	40.4	22	Blue
12446748088	8	½"	42.7	26	
12446750048	10	¼"	41.5	17	
12446750068	10	⅜"	42.3	22	
12446750088	10	½"	45.0	26	
12446752048	12	¼"	42.4	17	
12446752068	12	⅜"	43.3	22	
12446752088	12	½"	46.0	26	
12446754068	14	⅜"	45.0	22	
12446754088	14	½"	47.3	26	
12446756088	16	½"	48.1	26	
12446759088	19	½"	48.8	26	
12446748041	8	¼"	39.4	17	White

Note: Packing 25 unit

Hose Fittings

Nylon 6-6

Working pressure
Up to 14 BAR
(200 psi) at 20 °C

Temperature
(-)20 - 110 °C
(subject to application)

Fittings' dimensions
refer to tube ID or OD, with respect to the common application

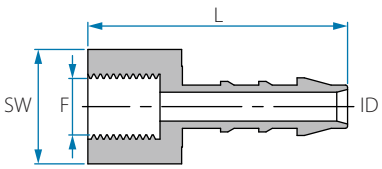

NPT Female Connector

Cat. No.	Tube ID inch	F (NPT)	L mm	SW	Color
12256704023	¼"	⅛"	36.7	14	
12256704043	¼"	¼"	40.1	17	
12256704063	¼"	⅜"	40.0	22	
12256704083	¼"	½"	43.7	27	
12256705023	5⁄16"	⅛"	38.9	14	
12256705043	5⁄16"	¼"	41.8	17	
12256705063	5⁄16"	⅜"	42.0	22	
12256705083	5⁄16"	½"	45.0	27	
12256706043	⅜"	¼"	44.1	17	Grey
12256706063	⅜"	⅜"	43.9	22	
12256706083	⅜"	½"	47.2	27	
12256708043	½"	¼"	44.7	17	
12256708063	½"	⅜"	45.2	22	
12256708083	½"	½"	48.8	27	
12256709063	9⁄16"	⅜"	46.5	22	
12256709083	9⁄16"	½"	50.3	27	
12256710083	⅝"	½"	50.4	27	
12256712083	¾"	½"	51.7	27	

Note: Packing 25 unit



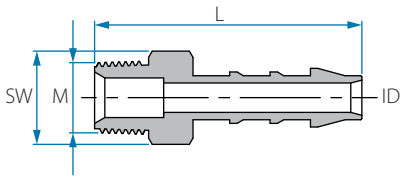

BSPT Male Hose Connector

Cat. No.	Tube ID mm	M (BSPT)	L mm	SW	Color
12446844028	4	⅛"	31.2	11	
12446844048	4	¼"	33.8	14	
12446845028	5	⅛"	34.7	11	
12446845048	5	¼"	38.3	14	
12446845088	5	½"	41.4	22	
12446846028	6	⅛"	35.3	11	
12446846048	6	¼"	39.2	14	
12446846068	6	⅜"	39.1	17	
12446846088	6	½"	42.3	22	
12446846128	6	¾"	43.0	22	
12446848028	8	⅛"	39.8	11	
12446848048	8	¼"	43.0	14	
12446848068	8	⅜"	43.0	17	
12446848088	8	½"	46.1	22	
12446848128	8	¾"	47.1	27	
12446850048	10	¼"	45.2	14	
12446850068	10	⅜"	45.2	17	Blue
12446850088	10	½"	48.3	22	
12446850128	10	¾"	49.3	27	
12446852048	12	¼"	46.0	14	
12446852068	12	⅜"	46.0	17	
12446852088	12	½"	49.3	22	
12446852128	12	¾"	50.0	27	
12446854068	14	⅜"	47.5	17	
12446854088	14	½"	50.8	22	
12446854128	14	¾"	51.7	27	
12446856088	16	½"	51.3	22	
12446856128	16	¾"	52.2	27	
12446859088	19	½"	52.2	22	
12446859128	19	¾"	53.3	27	
12446859168	19	1"	60.1	36	
12446865128	25	¾"	54.8	27	
12446865168	25	1"	66.6	36	

Note: Packing 25 unit

Hose Fittings

Nylon 6-6

Working pressure
Up to 14 BAR
(200 psi) at 20 °C

Temperature
(-)20 - 110 °C
(subject to application)

Fittings' dimensions
refer to tube ID or OD, with respect to the common application

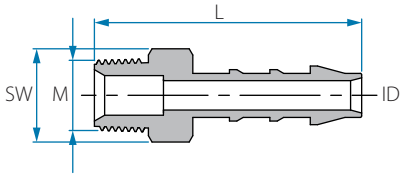

NPT Male Hose Connector

Cat. No.	Tube ID inch	M (NPT)	L mm	SW	Color
12256802023	5/32"	1/8"	30.7	11	
12256802043	5/32"	1/4"	35.3	14	
12256803023	3/16"	1/8"	36.3	11	
12256803043	3/16"	1/4"	39.7	14	
12256804023	1/4"	1/8"	36.1	11	
12256804043	1/4"	1/4"	40.6	14	
12256804063	1/4"	3/8"	41.9	17	
12256804083	1/4"	1/2"	46.7	22	
12256805023	5/16"	1/8"	40.2	11	
12256805043	5/16"	1/4"	44.7	14	
12256805063	5/16"	3/8"	45.9	17	
12256805083	5/16"	1/2"	51.0	22	
12256806043	3/8"	1/4"	46.5	14	
12256806063	3/8"	3/8"	47.7	17	Grey
12256806083	3/8"	1/2"	53.2	22	
12256806123	3/8"	3/4"	54.3	27	
12256808043	1/2"	1/4"	47.7	14	
12256808063	1/2"	3/8"	48.9	17	
12256808083	1/2"	1/2"	53.7	22	
12256808123	1/2"	3/4"	54.7	27	
12256809063	9/16"	3/8"	51.0	17	
12256809083	9/16"	1/2"	55.4	22	
12256809123	9/16"	3/4"	56.1	27	
12256810083	5/8"	1/2"	56.3	22	
12256810123	5/8"	3/4"	56.8	27	
12256812083	3/4"	1/2"	56.9	22	
12256812123	3/4"	3/4"	57.7	27	

Note: Packing 25 unit



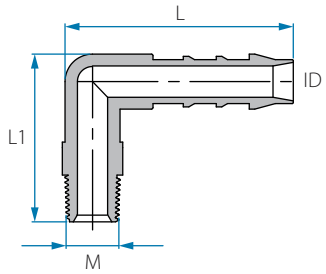

BSPT Male Elbow Hose Connector

Cat. No.	Tube ID mm	M (BSPT)	L mm	L1 mm	Color
12446944028	4	⅛"	26.7	24.1	
12446944048	4	¼"	26.7	27.2	
12446945028	5	⅛"	31.8	26.8	
12446945048	5	¼"	32.0	29.8	
12446945088	5	½"	31.8	33.0	
12446946028	6	⅛"	35.5	27.3	
12446946048	6	¼"	35.5	29.8	
12446946068	6	⅜"	35.5	30.0	
12446946088	6	½"	35.5	33.7	
12446948028	8	⅛"	41.5	30.4	
12446948048	8	¼"	41.5	32.8	
12446948068	8	⅜"	41.5	32.8	
12446948088	8	½"	41.5	36.8	
12446950048	10	¼"	45.5	33.9	Blue
12446950068	10	⅜"	45.5	34.1	
12446950088	10	½"	45.5	37.8	
12446950128	10	¾"	45.5	38.9	
12446952048	12	¼"	48.7	35.0	
12446952068	12	⅜"	48.7	35.3	
12446952088	12	½"	48.7	39.0	
12446952128	12	¾"	48.7	39.7	
12446954068	14	⅜"	51.4	38.5	
12446954088	14	½"	51.4	42.3	
12446954128	14	¾"	51.4	43.3	
12446956088	16	½"	53.7	44.9	
12446956128	16	¾"	53.7	46.0	
12446959088	19	½"	56.0	46.4	
12446959128	19	¾"	56.4	47.5	

Note: Packing 25 unit

Hose Fittings

Nylon 6-6

Working pressure
Up to 14 BAR
(200 psi) at 20 °C

Temperature
(-)20 - 110 °C
(subject to application)

Fittings' dimensions
refer to tube ID or OD, with respect to the common application

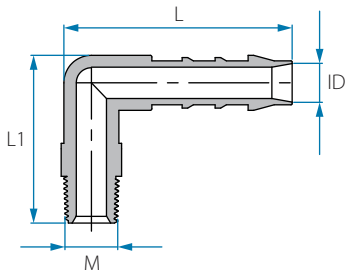

NPT Male Elbow Hose Connector

Cat. No.	Tube ID inch	M (NPT)	L mm	L1 mm	Color
12256902023	5/32"	1/8"	25.7	26.0	
12256902043	5/32"	1/4"	25.9	31.1	
12256903023	3/16"	1/8"	31.8	28.6	
12256903043	3/16"	1/4"	33.4	31.8	
12256903083	3/16"	1/2"	41.8	31.8	
12256904023	1/4"	1/8"	35.4	29.0	
12256904043	1/4"	1/4"	35.5	33.7	
12256904063	1/4"	3/8"	35.5	33.8	
12256904083	1/4"	1/2"	42.2	35.5	
12256905023	5/16"	1/8"	41.5	32.1	
12256905043	5/16"	1/4"	41.2	36.7	
12256905063	5/16"	3/8"	41.5	36.6	
12256905083	5/16"	1/2"	41.5	43.1	
12256906043	3/8"	1/4"	45.4	37.7	Grey
12256906063	3/8"	3/8"	45.3	37.5	
12256906083	3/8"	1/2"	45.4	44.4	
12256906123	3/8"	3/4"	45.4	44.0	
12256908043	1/2"	1/4"	48.6	39.0	
12256908063	1/2"	3/8"	48.3	28.6	
12256908083	1/2"	1/2"	48.7	45.2	
12256908123	1/2"	3/4"	48.7	45.2	
12256909063	9/16"	3/8"	51.4	42.2	
12256909083	9/16"	1/2"	51.4	48.6	
12256909123	9/16"	3/4"	51.5	48.5	
12256910083	5/8"	1/2"	53.8	51.5	
12256910123	5/8"	3/4"	53.8	51.4	
12256912083	3/4"	1/2"	56.6	52.8	
12256912123	3/4"	3/4"	56.2	53.0	

Note: Packing 25 unit

Reducing Elbow Hose Connector



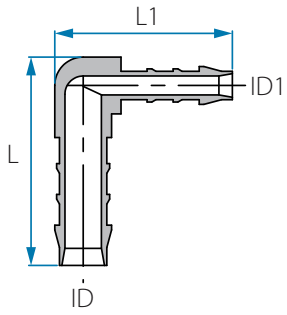

Cat. No.	Tube ID mm	Tube ID1 mm	L mm	L1 mm	Color
12446645448	5	4	31.8	27.8	
12446646448	6	4	35.5	29.0	
12446646458	6	5	35.4	34.1	
12446648468	8	6	41.6	39.3	
12446650468	10	6	45.3	40.1	Blue
12446650488	10	8	42.1	45.2	
12446652508	12	10	48.7	45.6	
12446654528	14	12	51.5	49.6	
12446656548	16	14	53.8	53.6	
12446659568	19	16	56.2	56.1	

Cat. No.	Tube ID inch	Tube ID1 inch	L mm	L1 mm	Color
12256603023	3/16"	5/32"	31.8	27.9	
12256604033	1/4"	3/16"	35.4	34.1	
12256605043	5/16"	1/4"	39.4	41.6	
12256606043	3/8"	1/4"	40.2	45.3	
12256606053	3/8"	5/16"	42.5	45.5	Grey
12256608063	1/2"	3/8"	45.8	48.6	
12256609083	9/16"	1/2"	49.8	51.1	
12256610093	5/8"	9/16"	53.6	53.6	
12256612103	3/4"	5/8"	55.8	55.8	

Note: Packing 25 unit

Hose Fittings

Nylon 6-6

Working pressure
Up to 14 BAR
(200 psi) at 20 °C

Temperature
(-)20 - 110 °C
(subject to application)

Fittings' dimensions
refer to tube ID or OD, with respect to the common application

Union Elbow Hose Connector



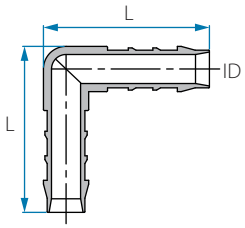

Cat. No.	Tube ID mm	L mm	Color
12446544008	4	26.3	
12446545008	5	31.7	
12446546008	6	35.5	
12446548008	8	41.4	
12446550008	10	44.6	Blue
12446552008	12	46.3	
12446554008	14	51.0	
12446556008	16	53.9	
12446559008	19	55.7	

Cat. No.	Tube ID inch	L mm	Color
12256502003	5⁄32"	25.6	
12256503003	3⁄16"	33.2	
12256504003	1⁄4"	36.1	
12256505003	5⁄16"	41.4	
12256506003	3⁄8"	44.6	Grey
12256508003	1⁄2"	47.6	
12256509003	9⁄16"	51.2	
12256510003	5⁄8"	54.3	
12256512003	3⁄4"	55.7	

Note: Packing 25 unit

Reducing Hose Connector



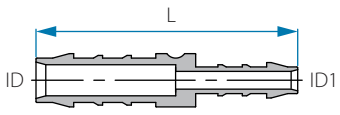

Cat. No.	Tube ID mm	Tube ID1 mm	L mm	Color
12445645448	5	4	42.2	
12445646448	6	4	45.7	
12445646458	6	5	50.6	
12445648458	8	5	54.4	
12445648468	8	6	56.3	
12445650468	10	6	58.9	
12445650488	10	8	62.0	
12445652488	12	8	63.8	Blue
12445652508	12	10	65.3	
12445654508	14	10	69.1	
12445654528	14	12	69.9	
12445656528	16	12	70.3	
12445656548	16	14	71.7	
12445659548	19	14	72.7	
12445659568	19	16	73.2	

Note: Packing 25 unit

Reducing Hose Connector

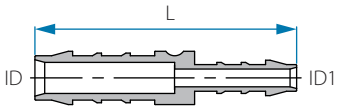

Cat. No.	Tube ID inch	Tube ID1 inch	L mm	Color
12255603023	3/16"	5/32"	42.2	
12255604023	1/4"	5/32"	45.7	
12255604033	1/4"	3/16"	50.6	
12255605033	5/16"	3/16"	54.4	
12255605043	5/16"	1/4"	56.3	
12255606043	3/8"	1/4"	58.9	
12255606053	3/8"	5/16"	62.0	
12255608053	1/2"	5/16"	63.8	Grey
12255608063	1/2"	3/8"	65.3	
12255609063	9/16"	3/8"	69.1	
12255609083	9/16"	1/2"	69.9	
12255610083	5/8"	1/2"	70.3	
12255610093	5/8"	9/16"	71.7	
12255612093	3/4"	9/16"	72.7	
12255612103	3/4"	5/8"	73.2	

Note: Packing 25 unit

Union Hose Connector



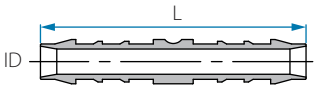

Cat. No.	Tube ID mm	L mm	Color
12446244008	4	36.6	
12446245008	5	48.5	
12446246008	6	52.2	
12446248008	8	59.3	
12446250008	10	63.0	Blue
12446252008	12	66.0	
12446254008	14	71.8	
12446256008	16	72.5	
12446259008	19	73.5	

Cat. No.	Tube ID mm	L mm	Color
12446248001	8	60	White

Cat. No.	Tube ID inch	L mm	Color
12256202003	5/32"	36.6	
12256203003	3/16"	47.0	
12256204003	1/4"	52.2	
12256205003	5/16"	59.3	
12256206003	3/8"	63.0	Grey
12256208003	1/2"	66.3	
12256209003	9/16"	71.9	
12256210003	5/8"	71.4	
*12256211003	11/16"	59.1	
12256212003	3/4"	73.8	

*Note: Packing 25 unit

Hose Fittings

Nylon 6-6

Working pressure
Up to 14 BAR
(200 psi) at 20 °C

Temperature
(-)20 - 110 °C
(subject to application)

Fittings' dimensions
refer to tube ID or OD, with respect to the common application

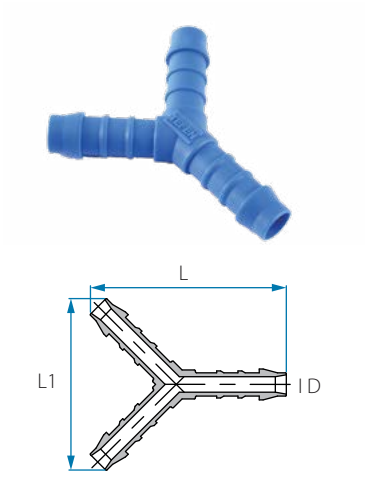

Y Hose Connector

Cat. No.	Tube ID mm	L mm	L1 mm	Color
12446344448	4	35.0	31.0	
12446346468	6	51.2	44.5	
12446348488	8	56.6	40.6	Blue
12446350508	10	62.3	55.0	
12446357578	17	63.3	57.7	

Cat. No.	Tube ID inch	L mm	L1 mm	Color
12256302023	5⁄32"	35.5	30.8	
12256304043	1⁄4"	50.8	44.3	
12256305053	5⁄16"	55.6	49.4	Grey
12256306063	3⁄8"	60.8	54.9	
12256311113	11⁄16"	62.5	57.4	

Note: Packing 25 unit

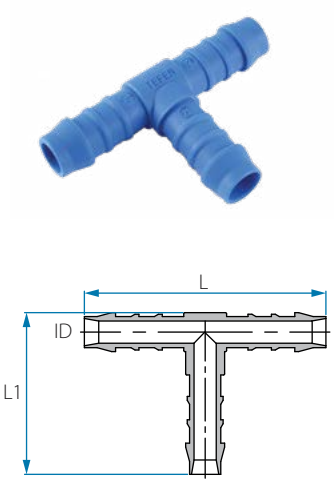

Union T Hose Connector

Cat. No.	Tube ID mm	L mm	L1 mm	Color
12446444448	4	40	24.3	
12446445458	5	50.95	30.8	
12446446468	6	56	32.2	
12446448488	8	61.7	38.5	
12446450508	10	67	41.8	Blue
12446452528	12	70.86	45.1	
12446454548	14	76.6	49.1	
12446456568	16	79.6	52.1	
12446459598	19	80.0	56.0	
12446456562	16	79.6	52.1	Black

Cat. No.	Tube ID inch	L mm	L1 mm	Color
12256402023	5⁄32"	40	24.3	
12256403033	3⁄16"	50.95	30.9	
12256404043	1⁄4"	56	32.2	
12256405053	5⁄16"	61.2	38.2	
12256406063	3⁄8"	67.0	41.8	Grey
12256408083	1⁄2"	70.86	45.1	
12256409093	9⁄16"	76.6	49.1	
12256410103	5⁄8"	79.6	51.4	
12256412123	3⁄4"	80.0	56	

Note: Packing 25 unit



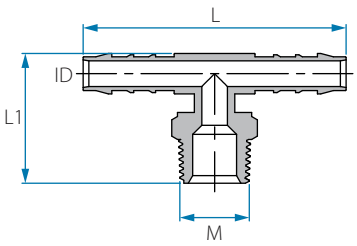

BSPT Male Branch T Hose Connector

Cat. No.	Tube ID mm	M (BSPT)	L mm	L1 mm	Color
12447144028	4	⅛"	39.4	22.2	
12447144048	4	¼"	45.2	27.0	
12447145028	5	⅛"	50.9	23.8	
12447145048	5	¼"	56.5	29.6	
12447146028	6	⅛"	55.8	24.8	
12447146048	6	¼"	63.1	30.0	
12447146068	6	⅜"	63.1	30.0	
12447146088	6	½"	63.1	33.8	
12447148028	8	⅛"	61.7	27.3	
12447148048	8	¼"	72.7	33.1	
12447148068	8	⅜"	72.7	33.1	
12447148088	8	½"	61.8	33.9	
12447150048	10	¼"	78.7	34.1	
12447150068	10	⅜"	78.7	34.1	Blue
12447150088	10	½"	78.9	38.1	
12447150128	10	¾"	78.9	39.1	
12447152048	12	¼"	82.7	35.2	
12447152068	12	⅜"	82.7	35.2	
12447152088	12	½"	82.6	39.1	
12447152128	12	¾"	82.6	40.0	
12447154068	14	⅜"	85.6	38.5	
12447154088	14	½"	85.6	42.1	
12447154128	14	¾"	85.6	43.3	
12447156088	16	½"	88.2	45.0	
12447156128	16	¾"	88.5	46.3	
12447159088	19	½"	90.3	46.3	
12447159128	19	¾"	90.7	47.7	

Note: Packing 25 unit

Hose Fittings

Nylon 6-6

Working pressure
Up to 14 BAR
(200 psi) at 20 °C

Temperature
(-)20 - 110 °C
(subject to application)

Fittings' dimensions
refer to tube ID or OD, with respect to the common application

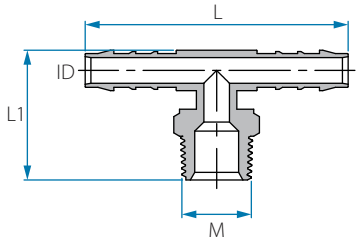

NPT Male Branch T Hose Connector

Cat. No.	Tube ID inch	M (NPT)	L mm	L1 mm	Color
12257103083	3/16"	1/2"	56.3	39.3	
12257104023	1/4"	1/8"	63.0	29.4	
12257104043	1/4"	1/4"	63.0	33.8	
12257104063	1/4"	3/8"	63.0	33.7	
12257104083	1/4"	1/2"	63.0	40.3	
12257105023	5/16"	1/8"	72.5	32.3	
12257105043	5/16"	1/4"	72.5	36.8	
12257105063	5/16"	3/8"	72.5	36.9	
12257105083	5/16"	1/2"	72.5	42.8	
12257106043	3/8"	1/4"	78.5	38.0	
12257106063	3/8"	3/8"	78.5	37.7	
12257106083	3/8"	1/2"	78.5	44.0	Grey
12257106123	3/8"	3/4"	78.5	43.8	
12257108043	1/2"	1/4"	82.6	39.3	
12257108063	1/2"	3/8"	82.6	38.8	
12257108083	1/2"	1/2"	82.6	45.5	
12257108123	1/2"	3/4"	82.6	45.5	
12257109063	9/16"	3/8"	85.2	42.6	
12257109083	9/16"	1/2"	85.2	48.3	
12257109123	9/16"	3/4"	85.2	48.3	
12257110083	5/8"	1/2"	88.4	51.5	
12257110123	5/8"	3/4"	88.4	51.1	
12257112083	3/4"	1/2"	90.5	53.0	
12257112123	3/4"	3/4"	90.5	52.5	

Note: Packing 25 unit



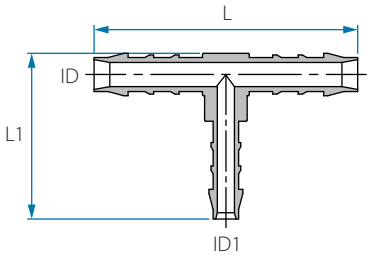

Reducing T Hose Connector

Cat. No.	Tube ID mm	Tube ID1 mm	L mm	L1 mm	Color
12447245448	5	4	50.7	25.7	
12447246458	6	5	55.7	31.8	
12447248468	8	6	61.5	36.2	
12447250488	10	8	66.5	39.3	Blue
12447252508	12	10	70.6	44.5	
12447254528	14	12	76.7	44.5	
12447256548	16	14	79.5	51.1	
12447259568	19	16	84.6	55.4	

Note: Packing 25 unit

Cat. No.	Tube ID inch	Tube ID1 inch	L mm	L1 mm	Color
12257203023	3/16"	5/32"	50.6	25.9	
12257204033	1/4"	3/16"	55.8	32.0	
12257205043	5/16"	1/4"	61.5	36.2	
12257206053	3/8"	5/16"	66.5	39.3	Grey
12257208063	1/2"	3/8"	70.3	43.5	
12257209083	9/16"	1/2"	76.3	48.0	
12257210093	5/8"	9/16"	79.4	51.0	
12257212103	3/4"	5/8"	84.3	55.2	

Note: Packing 25 unit

Hose Fittings

Nylon 6-6

Working pressure
Up to 14 BAR
(200 psi) at 20 °C

Temperature
(-)20 - 110 °C
(subject to application)

Fittings' dimensions
refer to tube ID or OD, with respect to the common application



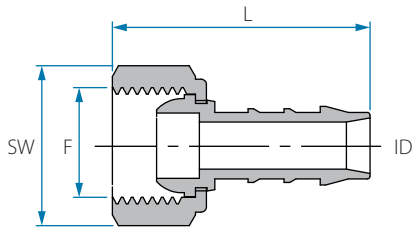

Note: No need for flat washer

Female Record Straight Hose Connector - Conical Seat

Cat. No.	Tube ID mm	F (BSP)	L mm	SW	Color
22444644028	4	⅛"	27.5	13	
22444644048	4	¼"	31.7	17	
22444645028	5	⅛"	32.0	13	
22444645048	5	¼"	36.2	17	
22444645068	5	⅜"	36.0	20	
22444646048	6	¼"	37.3	17	
22444646068	6	⅜"	36.8	20	
22444646088	6	½"	39.5	24	
22444648048	8	¼"	41.3	17	
22444648068	8	⅜"	40.8	20	
22444648088	8	½"	43.6	24	Blue
22444648128	8	¾"	43.4	30	
22444650068	10	⅜"	42.8	20	
22444650088	10	½"	43.6	24	
22444650128	10	¾"	45.6	30	
22444652088	12	½"	46.7	24	
22444652128	12	¾"	46.5	30	
22444654088	14	½"	48.9	24	
22444654128	14	¾"	48.1	30	
22444656128	16	¾"	48.5	30	
22444659128	19	¾"	49.3	30	
22444648042	8	¼"	41.3	17	
22444650062	10	⅜"	42.8	20	Black
22444652082	12	½"	46.7	24	



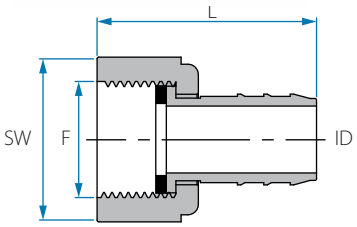

Female Record Straight Hose Connector

Cat. No.	F (BSP)	Tube ID1 mm	L mm	SW	Color
*22454765168	24	1"	61.8	44	Blue

Material: Polypropylene

Note: Sealing is by flat washer (order separately)

THREADED CONNECTORS

Food Contact FDA 21 CFR
For blue Nylon 6-6 only

Food Contact (EU) 1935/2004
For blue Nylon 6-6 only

REACH COMPLIANT

RoHS compliant

TSCA Compliant
For blue, gray & black Nylon 6-6 only


P. 77


P. 77


P. 78


P. 78


P. 79


P. 79


P. 80


P. 80


P. 81


P. 81


P. 82


P. 82


P. 83


P. 83


P. 83

Nylon 6-6

Working pressure
Up to 14 BAR
(200 psi) at 20 °C

Temperature
(-)20 - 110 °C
(subject to application)

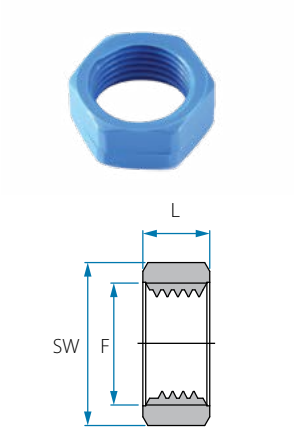

Panel Mounting Nut

Cat. No.	F (BSP)	L mm	SW	Color
**32006100042	¼"	5.0	17	Black
32006100081	½"	11.6	26	White
32006100082	½"	11.6	26	Black
32006100088	½"	11.6	26	Blue
*32006100201	M20	10	26	White

Note: Packing 25 unit
* Thin configuration
** Acetal

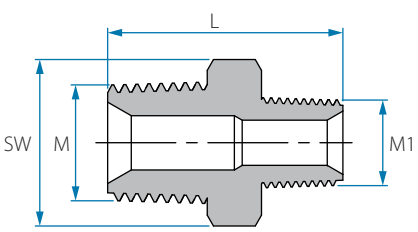

BSPT Pipe Reducing Nipple

Cat. No.	M (BSPT)	M1 (BSPT)	L mm	SW	Color
12012304028	¼"	⅛"	25.2	14	
12012306028	⅜"	⅛"	27.1	17	
12012306048	⅜"	¼"	28.5	17	Blue
12012308048	½"	¼"	31.5	22	
12012308068	½"	⅜"	31.5	22	
12012312088	¾"	½"	34.5	27	

Note: Packing 25 unit

NPT Pipe Reducing Nipple

Cat. No.	M (NPT)	M1 (NPT)	L mm	SW	Color
12022304023	¼"	⅛"	28.4	14	
12022306023	⅜"	⅛"	29.6	17	
12022308023	½"	⅛"	34.9	22	
12022312023	¾"	⅛"	35.4	27	
12022306043	⅜"	¼"	33.4	17	
12022308043	½"	¼"	38.7	22	Grey
12022312043	¾"	¼"	39.4	27	
12022308063	½"	⅜"	39.1	22	
12022312063	¾"	⅜"	39.6	27	
12022312083	¾"	½"	44.1	27	

Note: Packing 25 unit

Threaded Connectors

Nylon 6-6

Working pressure
Up to 14 BAR
(200 psi) at 20 °C

Temperature
(-)20 - 110 °C
(subject to application)

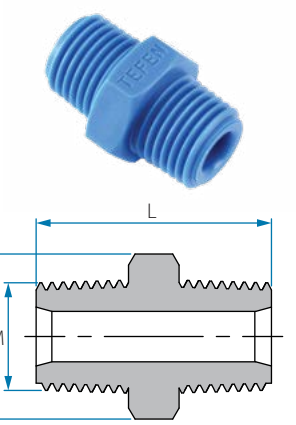

BSPT Pipe Hex Nipple

Cat. No.	M (BSPT)	L mm	SW	Color
12012202028	⅛"	23.2	11	
12012204048	¼"	27.1	14	
12012206068	⅜"	28.2	17	Blue
12012208088	½"	34.1	22	
12012212128	¾"	36	27	

Note: Packing 25 unit

NPT Pipe Hex Nipple

Cat. No.	M (NPT)	L mm	SW	Color
12022202023	⅛"	23.9	11	
12022204043	¼"	32.7	14	
12022206063	⅜"	34.4	17	Grey
12022208083	½"	43.3	22	
12022212123	¾"	44.4	27	

Note: Packing 25 unit

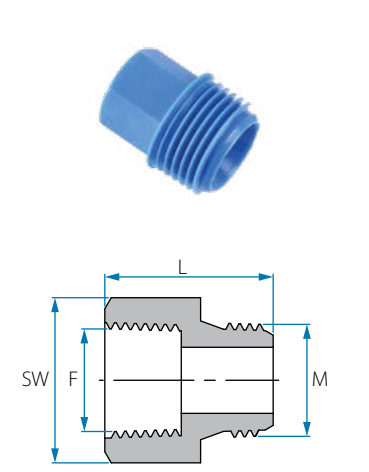

BSPT Pipe Adaptor

Cat. No.	F (BSPT)	M (BSPT)	L mm	SW	Color
12012002028	⅛"	⅛"	23.0	14	
12012002048	⅛"	¼"	23.0	14	
12012002068	⅛"	⅜"	24.0	14	
12012002088	⅛"	½"	26.9	14	
12012004028	¼"	⅛"	22.1	17	
12012004048	¼"	¼"	24.0	17	
12012004068	¼"	⅜"	24.8	17	
12012004088	¼"	½"	27.2	17	
12012006028	⅜"	⅛"	23.1	22	Blue
12012006048	⅜"	¼"	25.2	22	
12012006068	⅜"	⅜"	25.7	22	
12012006088	⅜"	½"	28.2	22	
12012008028	½"	⅛"	25.6	26	
12012008048	½"	¼"	27.3	26	
12012008068	½"	⅜"	28.0	26	
12012008088	½"	½"	30.6	26	

Note: Packing 25 unit

NPT Pipe Adaptor

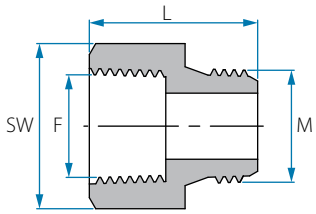

Cat. No.	F (NPT)	M (NPT)	L mm	SW	Color
12022002023	⅛"	⅛"	23.4	14	
12022002043	⅛"	¼"	23.4	14	
12022002063	⅛"	⅜"	27.4	14	
12022002083	⅛"	½"	32.5	14	
12022004023	¼"	⅛"	26.5	17	
12022004043	¼"	¼"	30.7	17	
12022004063	¼"	⅜"	30.5	17	
12022004083	¼"	½"	35.5	17	Grey
12022006023	⅜"	⅛"	26.3	22	
12022006043	⅜"	¼"	26.5	22	
12022006063	⅜"	⅜"	30.4	22	
12022006083	⅜"	½"	35.5	22	
12022008023	½"	⅛"	30.0	26	
12022008043	½"	¼"	34.0	26	
12022008063	½"	⅜"	36.6	26	
12022008083	½"	½"	39.0	26	

Note: Packing 25 unit

BSPT Pipe Bushing



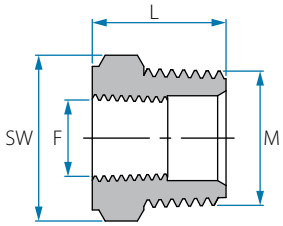

Cat. No.	M (BSPT)	F (BSPT)	L mm	SW	Color
12011004028	¼"	⅛"	17.2	14	
12011006028	⅜"	⅛"	17.8	17	
12011006048	⅜"	¼"	17.8	17	
12011008028	½"	⅛"	20.7	22	
12011008048	½"	¼"	20.4	22	Blue
12011008068	½"	⅜"	20.7	22	
12011012048	¾"	¼"	22.0	27	
12011012068	¾"	⅜"	22.2	27	
12011012088	¾"	½"	22.4	27	

Note: Packing 25 unit

NPT Pipe Bushing

Cat. No.	M (NPT)	F (NPT)	L mm	SW	Color
12021004023	¼"	⅛"	21.0	15	
12021006023	⅜"	⅛"	20.8	18	
12021006043	⅜"	¼"	20.8	19	
12021008023	½"	⅛"	27.2	24	
12021008043	½"	¼"	27.1	19	Grey
12021008063	½"	⅜"	27.2	29	
12021012043	¾"	¼"	27.0	29	
12021012063	¾"	⅜"	27.2	29	
12021012083	¾"	½"	27.3	29	

Note: Packing 25 unit

Threaded Connectors

Nylon 6-6

Working pressure
Up to 14 BAR
(200 psi) at 20 °C

Temperature
(-)20 - 110 °C
(subject to application)



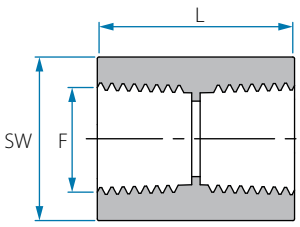

BSPT Female Pipe Coupling

Cat. No.	F (BSPT)	L mm	SW	Color
12010302021	⅛"	20.0	14	White
12010304042	¼"	23.6	17	Black
12010312122	¾"	38.0	34	
12010302028	⅛"	20.0	14	
12010304048	¼"	23.6	17	
12010306068	⅜"	24.5	21	Blue
12010308088	½"	29.7	26	
12010312128	¾"	38.0	34	

Note: Packing 25 unit

NPT Female Pipe Coupling

Cat. No.	F (NPT)	L mm	SW	Color
12020302023	⅛"	19.7	14	
12020304043	¼"	23.5	17	Grey
12020306063	⅜"	24.6	22	
12020308083	½"	29.5	27	

Note: Packing 25 unit



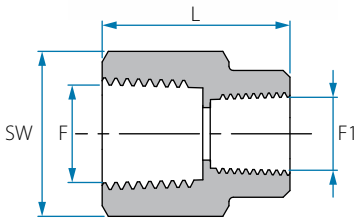

BSPT Pipe Reducing Coupling

Cat. No.	F (BSPT)	F1 (BSPT)	L mm	SW	Color
12011904028	¼"	⅛"	22.0	17	
12011906028	⅜"	⅛"	24.5	21	
12011906048	⅜"	¼"	24.5	21	
12011908048	½"	¼"	27.0	26	Blue
12011908068	½"	⅜"	27.0	26	
12011912048	¾"	¼"	30.1	34	
12011912088	¾"	½"	35.0	34	

Note: Packing 25 unit

NPT Pipe Reducing Coupling

Cat. No.	F (NPT)	F1 (NPT)	L mm	SW	Color
12021904023	¼"	⅛"	22.0	17	
12021906023	⅜"	⅛"	24.4	22	
12021906043	⅜"	¼"	24.8	22	Grey
12021908043	½"	¼"	27.0	26	
12021908063	½"	⅜"	26.8	26	

Note: Packing 25 unit



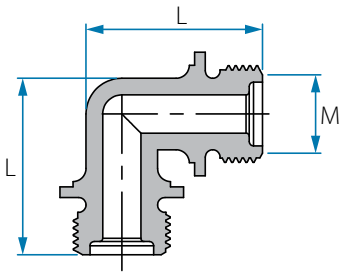

BSPT Threaded Elbow

Cat. No.	M (BSPT)	L mm	Color
12016502008	⅛"	24.4	Blue
12016504008	¼"	26.4	
12016506008	⅜"	31.8	
12016508008	½"	40.2	
12016502002	⅛"	24.4	Black
12016504001	¼"	26.4	White
12016504002	¼"	26.4	Black

Note: Packing 25 unit

NPT Threaded Elbow

Cat. No.	M (NPT)	L mm	Color
12026502003	⅛"	23.8	Grey
12026504003	¼"	28.4	

Note: Packing 25 unit



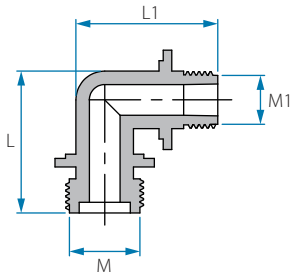

BSPT Reducing Threaded Elbow

Cat. No.	M (BSPT)	M1 (BSPT)	L mm	L1 mm	Color
12016904028	¼"	⅛"	26.4	24.4	Blue
12016906048	⅜"	¼"	31.5	31.5	
12016908068	½"	⅜"	40.0	38.1	

Note: Packing 25 unit

NPT Reducing Threaded Elbow

Cat. No.	M (NPT)	M1 (NPT)	L mm	L1 mm	Color
12026904023	¼"	⅛"	28.4	24.0	Grey

Note: Packing 25 unit

Threaded Connectors

Nylon 6-6

Working pressure
Up to 14 BAR
(200 psi) at 20 °C

Temperature
(-)20 - 110 °C
(subject to application)



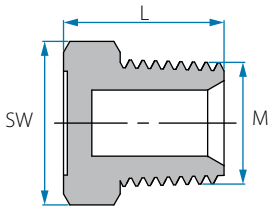

BSPT Hex Threaded Plug

Cat. No.	M (BSPT)	L mm	SW	Color
12012102008	⅛"	13.6	11	
12012104008	¼"	16.6	14	
12012106008	⅜"	16.1	17	Blue
12012108008	½"	19.6	22	
12012112008	¾"	22.0	27	
12012116008	1"	27.0	36	
12012104001	¼"	16.6	14	White
12012104002	¼"	16.6	14	Black
12012102002	⅛"	13.6	11	

Note: Packing 25 unit

NPT Hex Threaded Plug

Cat. No.	M (NPT)	L mm	SW	Color
12022102003	⅛"	14.7	11	
12022104003	¼"	19.4	14	
12022106003	⅜"	20.4	17	Grey
12022108003	½"	25.6	22	
12022112003	¾"	26.0	27	

Note: Packing 25 unit



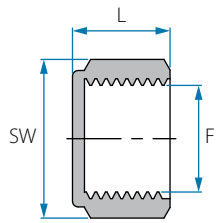

BSPT Pipe Cap

Cat. No.	F (BSPT)	L mm	SW	Color
12010802008	⅛"	10.4	13	
12010804008	¼"	14.2	17	
12010806008	⅜"	14.2	20	Blue
12010808008	½"	17.1	24	
12010812008	¾"	17.1	30	

Note: Packing 25 unit

BSPT Pipe T



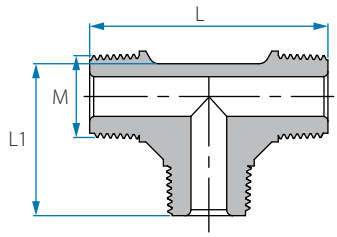

Cat. No.	M (BSPT)	L mm	L1 mm	Color
12016402008	⅛"	39.8	24.1	Blue
12016404008	¼"	44.0	26.2	
12016406008	⅜"	50.5	32.0	
12016408008	½"	64.0	40.3	

Note: Packing 25 unit

NPT Pipe T

Cat. No.	M (NPT)	L mm	L1 mm	Color
12026402003	⅛"	39.3	24.0	Grey
12026404003	¼"	48.4	28.5	

Note: Packing 25 unit

BSPT Pipe Reducing Branch T



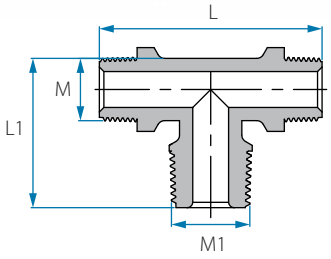

Cat. No.	M (BSPT)	M1 (BSPT)	L mm	L1 mm	Color
12017102048	⅛"	¼"	39.7	26.4	Blue
12017104028	¼"	⅛"	43.3	24.2	
12017104068	¼"	⅜"	43.3	38.2	
12017106048	⅜"	¼"	60.2	26.4	
12017108068	½"	⅜"	64.2	38.2	
12017106088	⅜"	½"	60.2	40.4	

Note: Packing 25 unit

NPT Pipe Reducing Branch T

Cat. No.	M (NPT)	M1 (NPT)	L mm	L1 mm	Color
12027104023	¼"	⅛"	48.4	24.0	Grey

Note: Packing 25 unit

BSPT Pipe Reducing Run T



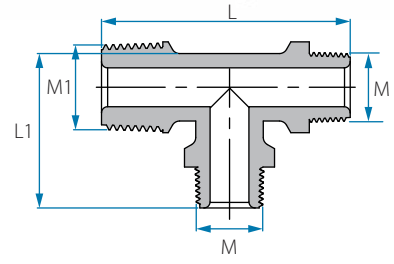

Cat. No.	M (BSPT)	M1 (BSPT)	L mm	L1 mm	Color
12017204028	¼"	⅛"	41.8	26.3	Blue
12017206048	⅜"	¼"	48.3	30.8	
12017208068	½"	⅜"	62.0	40.0	
12017202048	⅛"	¼"	42.7	25.5	
12017204068	¼"	⅜"	48.5	31.0	
12017206088	⅜"	½"	62.0	38.2	

Note: Packing 25 unit

NPT Pipe Reducing Run T

Cat. No.	M (NPT)	M1 (NPT)	L mm	L1 mm	Color
12027204023	¼"	⅛"	41.8	26.3	Grey

Note: Packing 25 unit

QUICK RELEASE

The special quick connector offers a fast and reliable push-to-connect mechanism.
The outer sleeve locks the plug into the socket.

When the plug is disconnected, the socket acts as a shut-off valve.
A variety of plugs can be connected and used, suitable for hydraulic or pneumatic systems.

RoHS compliant

REACH COMPLIANT



P. 85



P. 85



P. 85



P. 85

Working pressure
Up to 14 BAR
(200 psi) at 20 °C

Temperature
4 - 90 °C
(subject to application)

part	material
Body	Nylon 6-6
Internal parts	Acetal
Spring + Ball	Stainless Steel



Quick Release Socket

Cat. No.	F (BSPT)	L mm	SW	O-ring	Color
22080004000	¼"	44.0	19	NBR	Red
22081104002	¼"	44.0	19	EPDM	
22080004001	¼"	44.0	19	EPDM	White

Acetal

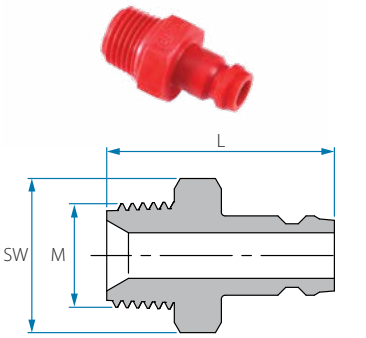

Plug - External Thread

Cat. No.	M (BSPT)	L mm	SW	Color
12081404006	¼"	31.2	17	Red

Note: Packing 25 unit

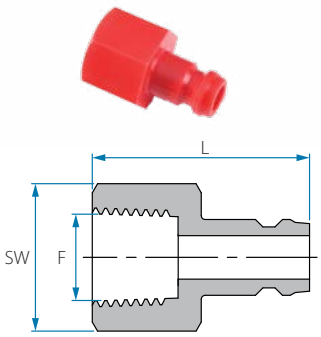

Plug - Internal Thread

Cat. No.	F (BSPT)	L mm	SW	Color
12081504006	¼"	28.6	17	Red

Note: Packing 25 unit

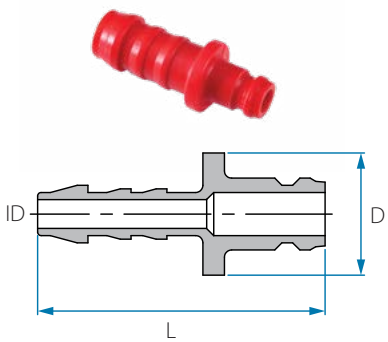

Plug - Hose Connector

Cat. No.	Tube ID mm	L mm	D	Color
12081645006	5	37.8	16.7	
12081646006	6	39.8	16.7	
12081648006	8	43.2	16.8	Red
12081650006	10	43.2	16.8	
12081652006	12	43.2	16.8	

Note: Packing 25 unit

UNIQUE SOLUTIONS

RoHS compliant

REACH COMPLIANT


P. 87


P. 87


P. 88


P. 88


P. 88


P. 88


P. 89


P. 89


P. 90


P. 90


P. 90


P. 91


P. 91


P. 91

Fittings' dimensions refer to tube ID or OD, with respect to the common application.

The Tefen snap clips are the simple and fast solution for securing flexible hoses and tubes on any barb fittings.

How to use:
Insert the snap clip onto the tube on place, and give it a manual press to ensure snug joint. Use a plier for final tightening.
How to release:
Apply lateral pressure to unlock it.
Main advantages: Strong, Durable, Reusable, reasonable price.

Acetal



Snap Clip

Cat. No.	Tube OD min - max	Color
17090010002	8-10	
17090012002	10-12	
17090013002	11-13	
17090015002	13-15	
17090016002	14-16	
17090017002	15-17	
17090018002	16-18	■ Black
17090019002	17-19	
17090020002	18-20	
17090021002	20-22	
17090023002	21-23	
17090025002	23-25	
17090028002	26-28	
17090049002	47-49	

* Only RoHS

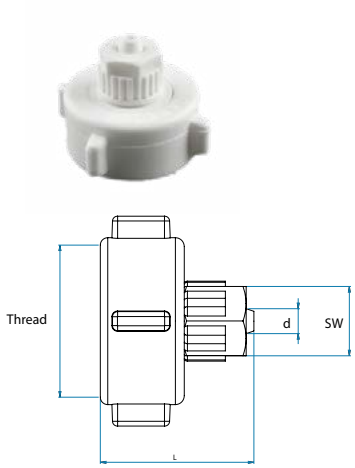

BSP Female Union Record Connector

Cat. No.	Tube OD	Fits for BSP (inch)	Tube ID	Color
22044704121	¼"	¾"	6	
22044746121	6 mm	¾"	6	
22044648121	8 mm	¾"	6	☐ White
22044750121	10 mm	¾"	6	
22044752121	12 mm	¾"	6	

Note: POLYPROPYLENE
Product is sold without flat seal (can be ordered separately)

Fittings Products

Unique Solutions

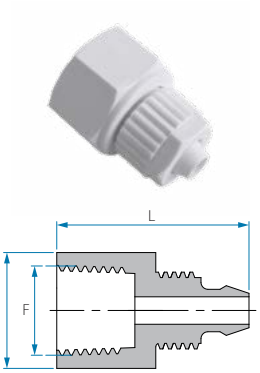

BSPT Female Union Connector

Cat. No.	Tube OD mm	Thread BSPT inch	Tube ID	SW	SW1	Color
22044746061	6	⅜"	6.2	14	20	
22044746081	6	½"	6.2	14	24	
22044748061	8	⅜"	6.2	14	20	☐ White
22044748081	8	½"	6.2	14	24	
22044750081	10	½"	6.2	14	24	

Note: POLYPROPYLENE



BSPT Female Elbow Record Connector

Cat. No.	Tube OD mm	Fits for BSP	L mm	L1 mm	Material	Color
22044548121	8	¾"	40.0	42.5	PP	☐ White
224547E8121	8	¾"	40.0	42.5	Acetal	

Note: Product is sold without flat seal (can be ordered separately)





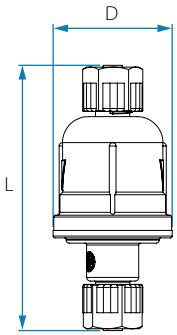

Water Pre Filter

Cat. No.	Filter Micron	Maximum flow rate L/M	Maximum flow rate G/M	Hose connector inlet/outlet (inch)	Anti scale subsstance	Check valve	Diameter mm (inch)	Length mm (inch)	Color
22046709101	100	8	2.11	8 mm (5/16")	-	-	32 (1¼")	71.7 (2 13/16")	☐ White
22046709501	100	8	2.11	10 mm (⅜")	-	-	32 (1¼")	78 (3 1/16")	☐ White
220467T9008	100	8	2.11	8 mm (5/16")	✓	✓	32 (1¼")	71.7 (2 13/16")	■ Blue

Note: Body and Cover - Acetal



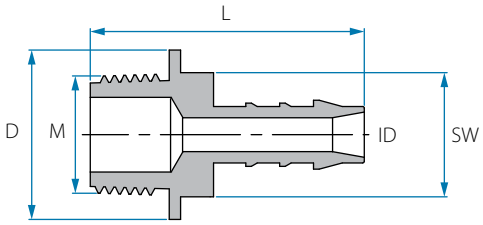

Flange Mounting Male Hose Connector

Cat. No.	Tube ID mm	M (BSPT)	L mm	D mm	SW	Color
12F46850088	10	½"	49.3	30.0	22	Blue

Note: Packing 25 unit



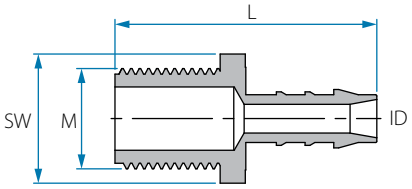

Special Panel Male Hose Connector

Cat. No.	Tube ID mm	M (BSP)	L mm	SW	Color
12P46850088	10	½"	53.4	27	Blue

Note: Packing 25 unit

Unique Solutions

Working pressure
Up to 10 BAR
(145 psi) at 20 °C

Temperature
4 - 50 °C
(subject to application)

part	material
Body	PP
Socket	Nylon 6-6
Rubber	EPDM



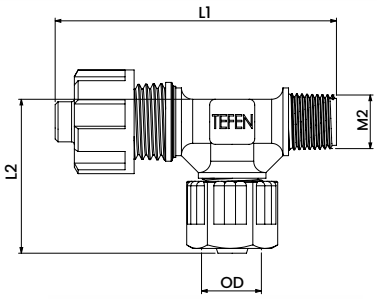

Pressure Check Socket

Cat. No.	L1 mm	L2 mm	OD mm	M2 (BSPT)
22M47502042	50	27.5	8	⅛"

REACH & RoHS on request



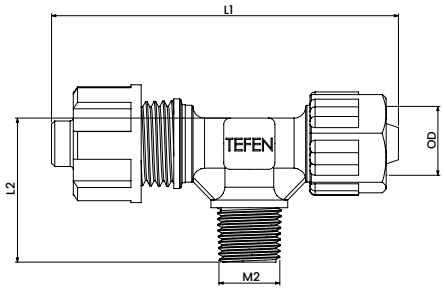

Cat. No.	L1 mm	L2 mm	OD mm	M2 (BSPT)
22M47802048	54	22.5	8	⅛"

REACH & RoHS on request



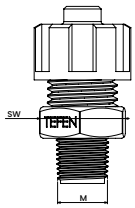

Cat. No.	SW	M (BSPT)
22016204022	15	⅛"
22016204042	15	¼"
22016204062	22	⅜"
22016204082	22	½"

REACH & RoHS on request

Fittings' dimensions refer to tube ID or OD, with respect to the common application.

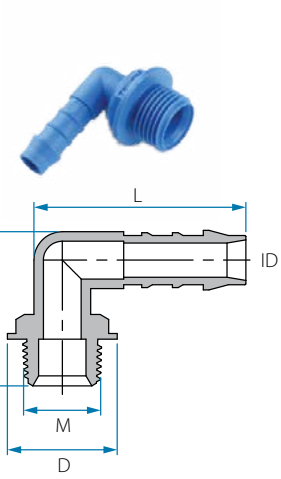

BSPT Male Elbow Hose Connector - Flange

Cat. No.	Tube ID mm	M (BSPT)	L mm	L1 mm	D mm	Color
12F46950068	10	⅜"	45.7	34.7	23.5	Blue
12F46950088	10	½"	45.5	38.9	30.0	

Note: Packing 25 unit

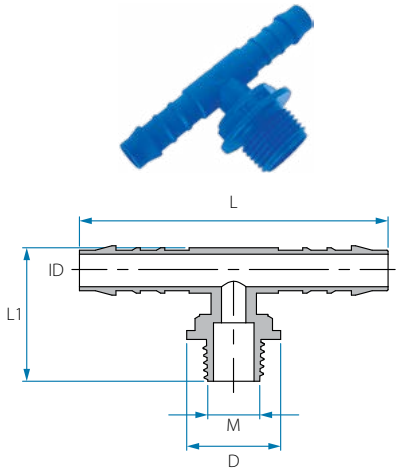

BSPT Flange Branch T Hose Connector

Cat. No.	Tube ID mm	M (BSPT)	L mm	L1 mm	D mm	Color
12F47150068	10	⅜"	79.0	34.5	23.5	Blue
12F47150088	10	½"	78.9	39.2	30.0	

Note: Packing 25 unit



BSPT Hex Threaded Flange Plug

Cat. No.	M (BSPT)	L mm	SW	D mm	Color
12012108L08	½"	21.9	22	29.9	Blue

Note: Packing 25 unit

Custom Made Threaded Plug

Cat. No.	M (NPT)	L mm	SW	Color
12S22108003	½"	25.3	22	Grey

Note: Packing 25 unit

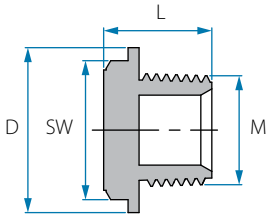

Custom Made Reducing Coupling

Cat. No.	F (NPT)	F1 (BSPT)	L mm	SW	Color
12011908063	½"	⅜"	27.7	27	Grey

Note: Packing 25 unit

TUBES

See specifics
in following tables

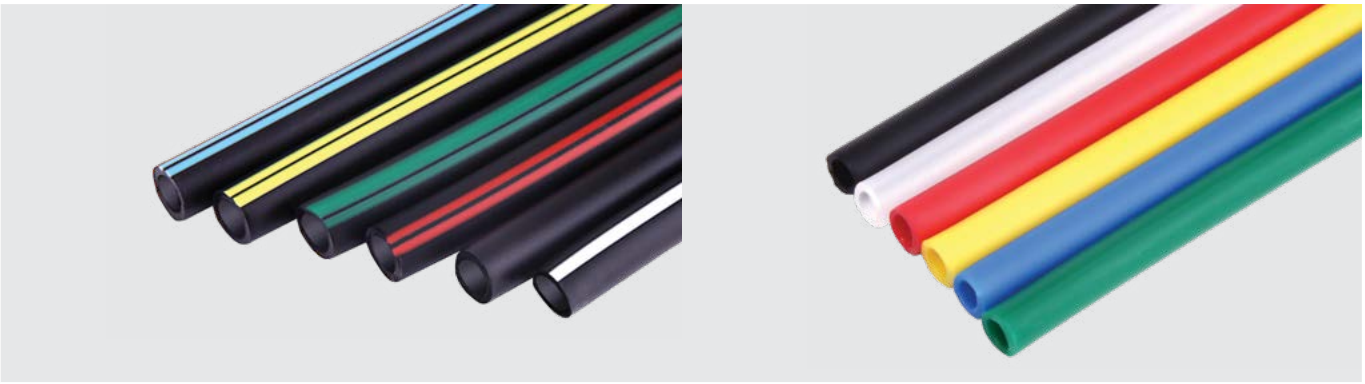

P. 93

P. 94

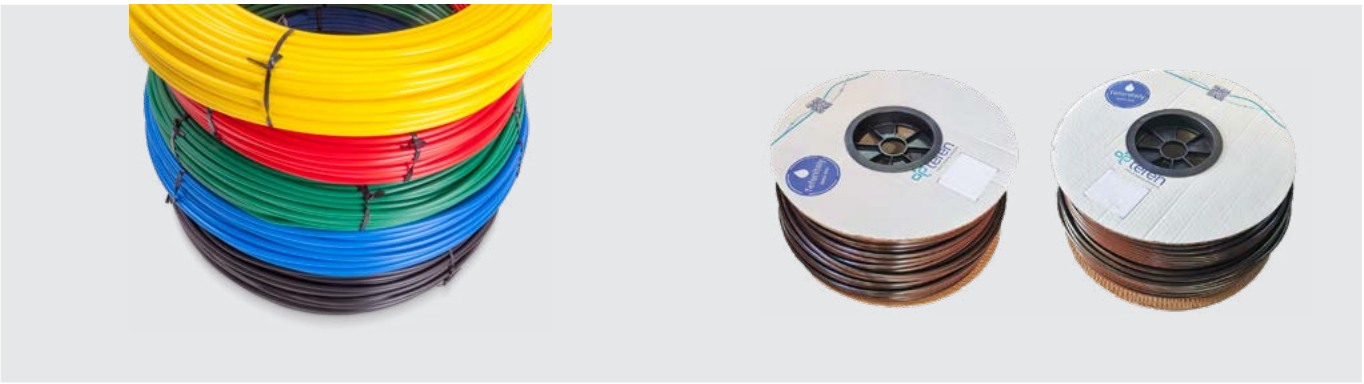

P. 95

P. 95

LDPE



LDPE Control Tube

Product code	Tube OD mm	Tube ID mm	Min Bend Radius	Roll Length	Burst Pressure	Available colors
1403004601X	6	4	1"	100 m	32 bars	
1403004620X	6	4	1"	200 m	32 bars	
1403004650X	6	4	1"	500 m	32 bars	
1403004810X	8	5.6	1.5"	100 m	32 bars	
1403004820X	8	5.6	1.5"	200 m	32 bars	
1403004850X	8	5.6	1.5"	500 m	32 bars	

* 2 stripes - default
* 1 or 3 stripes - optional

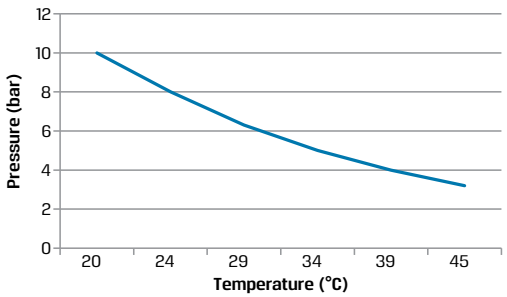

* If not in stock, min. quantity 5,000 m.

LDPE Color coding

LDPE tubes: X stands for the color of the tube.

1	White
2	Black
6	Red
7	Green
8	Blue
9	Yellow

Tubes

LDPE



LDPE Tube

Product code	Tube OD mm	Tube ID mm	Min Bend Radius	Roll Length	Burst Pressure	Available colors
1403004410X	4	2.2	12	100 m	34 bars	
1403004610X	6	4	25	100 m	34 bars	
1403004810X	8	5.3	35	100 m	32 bars	
1403005010X	10	7	50	100 m	28 bars	
1403005210X	12	9	75	100 m	28 bars	

Product code	Tube OD mm	Tube ID mm	Min Bend Radius	Roll Length	Burst Pressure	Available colors
1403000310X	3/16"	0.117"	1/2"	100 m	34 bars	
1403000410X	1/4"	0.170"	1"	100 m	32 bars	
**14030004111	1/4"	0.170"	1"	100 m	32 bars	
1403000510X	5/16"	0.212"	1 1/2"	100 m	32 bars	
1403000610X	3/8"	0.256"	2"	100 m	28 bars	
1403000810X	1/2	9	75	100 m	28 bars	

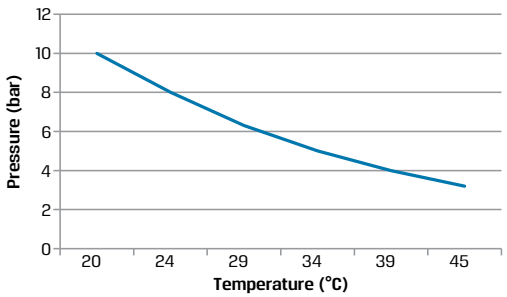

* If not in stock, min. quantity 20,000 m.

LDPE Color coding

tubes: X stands for the color of the tube.

1	Semi Transparent	WRAS
2	Black	WRAS
6	Red	
7	Green	
8	Blue	
9	Yellow	
**	External White, Internal Black	WRAS

PVC

Plasticized PVC Tube

Product code	Tube OD mm	Tube ID mm	Roll Length
1407000510X	5	3	100 m
1407000520X	5	3	200 m
1407000550X	5	3	500 m
1407006510X	6.5	4	100 m
1407006520X	6.5	4	200 m
1407000710X	7	4	100 m
1407000720X	7	4	200 m
1407000750X	7	4	500 m
*14070010102	10	7	100 m
1407001210X	12	7	100 m
1407001310X	13	9	100 m
1407001610X	16	11	100 m

* Available only in black



PVC Color coding

PVC tubes: X stands for the color of the tube.

2	Black
3	Brown

VALVES

Tefen's valves are suitable for various applications. They are resistant to high pressure and chemicals, work in a wide range of temperatures, improved grinding and discrepancies. They are designed for flexibility, efficiency and reliability.


P. 97


P. 97


P. 97


P. 97


P. 97


P. 97


P. 98


P. 98


P. 99


P. 99

Working pressure
PP - up to 10 BAR
(145.04 PSI) at 20 °C
Acetal & PVDF - up to 16 BAR
(232.06 PSI) at 20 °C

Temperature
PP - (-)5 - 60 °C
(subject to application)
Acetal & PVDF - (-)20 - 90 °C
(subject to application)

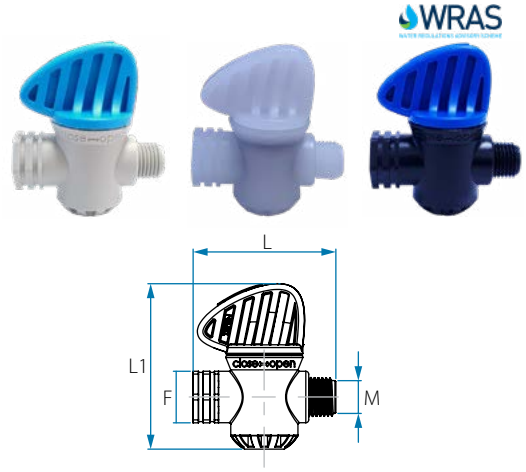

Dual Tech Valve

Cat. No.	M (BSPT)	F (BSPT)	L mm	L1 mm	Material	Color
23002404042	¼"	¼"	51.2	57.6	Acetal	Black
23002504043	¼"	¼"	51.7	58.8	PP	Grey
23002904041	¼"	¼"	51.8	59.0	PVDF	White

Note: All configurations (8 mm barb / ¼" thread) avalible on demand

Working pressure
Up to 10 BAR
(145.04 psi) at 20 °C

Temperature
(-5) °C -60 °C
(subject to application)

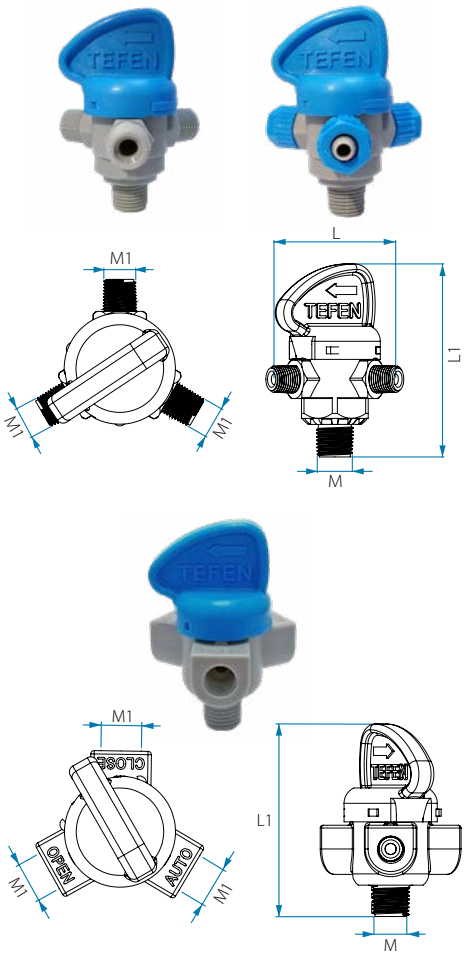

Quatro Tech Valve

Cat. No.	M (BSPT)	M1	L mm	L1 mm	Color
23003403033	¼"	⅛" BSPT	49.7	68.3	Grey
23003404043	¼"	¼" BSPT	52.0	68.3	
23003408083	¼"	8 mm	55.5	68.3	
**23003402483	¼"	**	51.7	58.8	

Note: All configurations (8 mm barb / ¼" / ⅛" thread) avalible on demand
** 8 mm barb connection

Cat. No.	M	M1 (NPT) Female	L1 mm	Color
23003405053	¼" BSPT	⅛"	68	Grey
23003406053	¼" NPT	⅛"	68	Dark Grey

Valves

Reinforces Polypropylene

Working pressure
Up to 8 BAR
(116.03 psi) at 20 °C

Temperature
(-)4 - 90 °C
(subject to application)



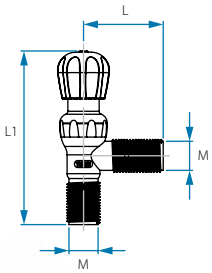

Fine Flow Needle Valve

Cat. No.	M (BSPP)	L mm	L1 mm	Handle Color	Flow Range (l/h)	Seals
22272908011	½"	50.0	108-122	Orange	10-100	Viton

Working pressure
Up to 16 BAR
(232.06 psi) at 20 °C

Temperature
-4 °C - 90 °C
(subject to application)



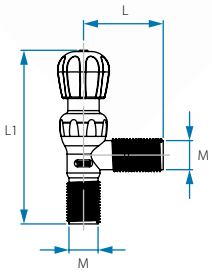

High Flow Needle Valve

Cat. No.	M (BSPP)	L mm	L1 mm	Handle Color	Flow Range (l/h)	Seals
22272908111	½"	50.0	108-122	Grey	100-1000	EPDM



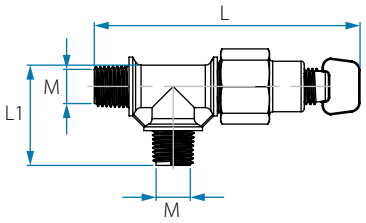

Needle Valve

Cat. No.	M (BSPT)	M1 (BSPT)	L mm	L1 mm	Color
22272904011	¼"	¼"	74.4-87.2	31.8	☐ White

Note: Material: Acetal

Working pressure
up to 16 bar (232.06 PSI)
at 20°C

Temperature
0 - 60 °C
(subject to application)



*

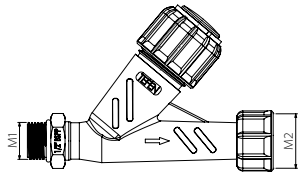

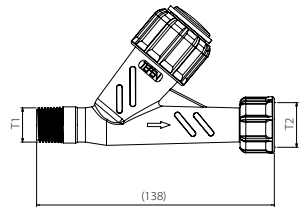

Line Check Valve

Cat. No.	M2	Male/ Female	M1	Male/ Female	Seals
23441108122	½" BSPT	Male*	¾" BSPP	Female	VITON
23444008122	½" BSPT	Male	¾" BSPP	Female	EPDM
23444012122	¾" BSPT	Female	¾" BSPP	Female	EPDM
23444016122	1" BSPT	Female	¾" BSPP	Female	EPDM
23444108122	½" BSPT	Male	¾" BSPP	Female	VITON
23444115122	¾" BSPT	Female	¾" BSPP	Female	VITON
23444116122	1" BSPT	Female	¾" BSPP	Female	VITON

Spraying & Fogging Nozzles

Tefen spray and fogging nozzles are designed for various applications.
They are ideal for adding humidity and cooling for livestock applications, vegetable and industrial refrigerators

- Fan Nozzles: straight wetting pattern.
- Connection: Flange configuration.
- Conical spray nozzles: round hollow wetting pattern.
- Connection: Flange configuration.
- Conical spray nozzle with ⅛" NPT male thread: give a round hollow wetting pattern.
- Non Drip nozzle: allow to hold the fluid pressure at 0.3 [bar] for fast and short operation and prevent fluid dripping.
- Finger filter: will give extra protection for each nozzle small articles in the system to prevent clogging.
- Adjustable nozzle: design for domestic use, fits with Tefen spray guns.
- Nozzle filter: designed to fit Tefen nozzle holders. Filter screen= 100 mesh/ /140 micron.
- Misting unit: Designed with 2 adjustable arms, to hold 2 flange nozzles specially designed for vitrine fruit & vegetables supermarket refrigerators.
- ⅛" short finger filter: Designed for small hydraulic loops on agriculture and industrial application. Filter screen= 100 mesh/ /149 micron.
- ¼" long finger filter: designed for an integral filtration of hydraulic control valves. Filter screen= 100 mesh/ /149 micron.


P. 101


P. 101


P. 102


P. 102


P. 103


P. 103


P. 104


P. 104


P. 105


P. 105


P. 105


P. 105


P. 105


P. 106


P. 106


P. 106


P. 106


P. 106


P. 106


P. 106

Acetal

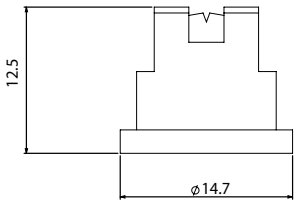



Fan Spray Nozzle

Product code	Marking	α Angle	Lit per Min Bar 2	Lit per Min Bar 3	Lit per Min Bar 4	Lit per Min Bar 6	Lit per Min Bar 8	Lit per Min Bar 10	Color
12210165051	65 005	65 °	0.38	0.47	0.53	0.66	0.753	0.847	White
12210165052	65 005	65 °	0.38	0.47	0.53	0.66	0.753	0.847	Black
12210110057	110 005	110 °	0.296	0.362	0.417	0.513	0.585	0.658	Green
12210110209	110 02	110 °	1.20	1.45	1.70	2.00	2.267	2.533	Yellow
12210110255	110 025	110 °	0.623	0.780	0.899	1.106	1.267	1.428	Creme
12210110308	110 03	110 °	1.167	1.432	1.649	2.039	2.330	2.620	Blue
12210110406	110 04	110 °	1.434	1.760	2.032	2.501	2.857	3.212	Red
12210110503	110 05	110 °	1.627	2.027	2.350	2.893	3.315	3.737	Brown

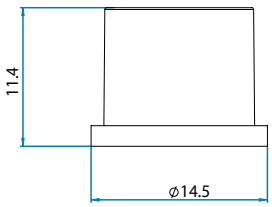



Conical Spray Nozzle

Product code	Marking	α Angle	Lit per Min Bar 2	Lit per Min Bar 3	Lit per Min Bar 4	Lit per Min Bar 6	Lit per Min Bar 8	Lit per Min Bar 10	Color
22210016502	1 65	65 °	0.061	0.074	0.084	0.098	0.110	0.123	Black
22210018001	1 80	80 °	0.063	0.078	0.092	0.117	0.135	0.153	White
22210018002	1 80	80 °	0.063	0.078	0.092	0.117	0.135	0.153	Black
22210018011	1 80F	80 °	0.035	0.042	0.049	0.059	0.067	0.075	Off White
22210018012	1 80F	80 °	0.035	0.042	0.049	0.059	0.067	0.075	Black
22210028006	3 80	80 °	0.350	0.430	0.520	0.630	0.723	0.817	Red
22210011055	1 105	105 °	0.058	0.068	0.078	0.098	0.111	0.125	Creme
22210011057	1 105	105 °	0.058	0.068	0.078	0.098	0.111	0.125	Green

Spraying & Fogging Nozzles

Conical Spray Nozzle M ⅛" NPT

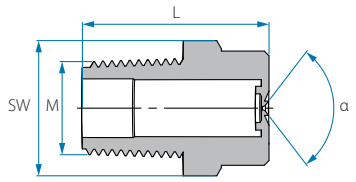



Product code	Marking	α Angle	L mm	SW	Lit per Min Bar 2	Lit per Min Bar 3	Lit per Min Bar 4	Lit per Min Bar 6	Lit per Min Bar 8	Lit per Min Bar 10	Color
22210218008	21 80	80 °	20	13	0.060	0.070	0.080	0.093	0.104	0.115	Blue
22210078001	07 80	80 °	20.3	13	0.043	0.053	0.060	0.069	0.078	0.086	White
22210078002	07 80	80 °	20.3	13	0.043	0.053	0.060	0.069	0.078	0.086	Black
22210078003	07 80	80 °	20.3	13	0.043	0.053	0.060	0.069	0.078	0.086	Grey
22210078006	07 80F	80 °	19.8	13	0.038	0.047	0.054	0.064	0.073	0.081	Red
22210078011	07 80F	80 °	19.8	13	0.038	0.047	0.054	0.064	0.073	0.081	White
22210078012	07 80F	80 °	19.8	13	0.038	0.047	0.054	0.064	0.073	0.081	Black
22210211055	21 105	105 °	20.5	13	0.063	0.075	0.086	0.108	0.123	0.138	Creme
22210311055	31 105	105 °	20.5	13	0.084	0.096	0.118	0.120	0.128	0.139	Creme
22210221202	22 120	120 °	20.4	13	0.108	0.132	0.152	0.190	0.217	0.245	Black
22210221207	22 120F	120 °	20.4	13	0.083	0.099	0.113	0.142	0.161	0.183	Green
22212201458	220 145	145 °	20.0	13	0.171	0.207	0.240	0.280	0.327	0.368	Blue

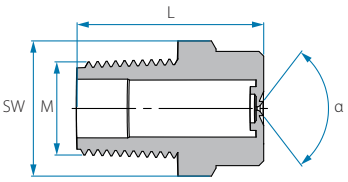



Non Drip Conical Spray Nozzle M ⅛" NPT

Product code	Marking	α Angle	L mm	SW	Lit per Min Bar 3	Lit per Min Bar 4	Lit per Min Bar 6	Lit per Min Bar 8	Lit per Min Bar 10	Color
22211218008	21 80	80 °	20	13	0.06	0.074	0.092	0.108	0.124	Blue
22211078001	07 80	80 °	20.3	13	0.046	0.053	0.069	0.081	0.092	White
22211078002	07 80	80 °	20.3	13	0.046	0.053	0.069	0.081	0.092	Black
22211078003	07 80	80 °	20.3	13	0.046	0.053	0.069	0.081	0.092	Grey
22211078006	07 80F	80 °	19.8	13	0.040	0.048	0.062	0.073	0.084	Red
22211078011	07 80F	80 °	19.8	13	0.040	0.048	0.062	0.073	0.084	White
22211078012	07 80F	80 °	19.8	13	0.040	0.048	0.062	0.073	0.084	Black
22211211055	21 105	105 °	20.5	13	0.072	0.084	0.106	0.123	0.140	Creme
22211211052	21 105	105 °	20.5	13	0.072	0.084	0.106	0.123	0.140	Black
22211221202	22 120	120 °	20.4	13	0.120	0.142	0.182	0.213	0.244	Black
22211221207	22 120F	120 °	20.4	13	0.099	0.113	0.142	0.161	0.183	Green
22212211458	220 145	145 °	20.0	13	0.168	0.205	0.257	0.313	0.360	Blue

* Openning pressure ~0.5 bar



Conical Spray Nozzle ⅛" NPT with Filter

Product code	Marking	Thread Size	α Angle	L mm	Lit per Min Bar 2	Lit per Min Bar 3	Lit per Min Bar 4	Lit per Min Bar 6	Lit per Min Bar 8	Lit per Min Bar 10	Color
22219218008	21 80	⅛"	80 °	15	0.060	0.070	0.080	0.093	0.104	0.115	Blue
22219078001	07 80	⅛"	80 °	15	0.041	0.05	0.057	0.066	0.074	0.083	White
22219078002	07 80	⅛"	80 °	15	0.041	0.05	0.057	0.066	0.074	0.083	Black
22219078003	07 80	⅛"	80 °	15	0.043	0.053	0.060	0.069	0.078	0.086	Grey
22219078006	07 80F	⅛"	80 °	15	0.040	0.046	0.053	0.061	0.068	0.075	Red
22219078012	07 80F	⅛"	80 °	15	0.040	0.046	0.053	0.061	0.068	0.075	Black
22219211055	21 105	⅛"	105 °	15	0.060	0.070	0.080	0.093	0.104	0.115	Creme
22219311055	31 105	⅛"	105 °	15	0.080	0.090	0.102	0.110	0.116	0.125	Creme
22219221202	22 120	⅛"	120 °	15	0.103	0.124	0.149	0.171	0.194	0.216	Black

* Filtration 140 Micron



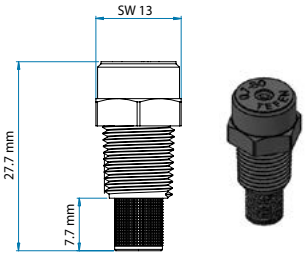

Non Drip Conical Spray Nozzle ⅛" NPT with short Filter

Product code	Marking	Thread Size	α Angle	Lit per Min Bar 2	Lit per Min Bar 3	Lit per Min Bar 4	Lit per Min Bar 6	Lit per Min Bar 8	Lit per Min Bar 10	Color
**22212218038	21 80	⅛"	80 °	0.06	0.07	0.08	0.093	0.104	0.115	Blue
22215218008	21 80	⅛"	80 °	0.06	0.07	0.08	0.093	0.104	0.115	Blue
22211078031	07 80	⅛"	80 °	0.041	0.05	0.057	0.066	0.074	0.083	White
22211078033	07 80	⅛"	80 °	0.041	0.05	0.057	0.066	0.074	0.083	Grey
22215078006	07 80F	⅛"	80 °	0.103	0.124	0.149	0.171	0.194	0.216	Red
22215078011	07 80F	⅛"	80 °	0.103	0.124	0.149	0.171	0.194	0.216	White
22215211055	21 105	⅛"	105 °	0.06	0.07	0.08	0.093	0.104	0.115	Creme
22215221202	22 120	⅛"	120 °	0.103	0.124	0.149	0.171	0.194	0.216	Black

* Viton ball
** Filtration 140 Micron

Spraying & Fogging Nozzles

Acetal



Accessories for Nozzles

Product code	Product
38000000054	PVC Protector Cap for Nozzle

The PVC Cap protects the upper nozzle crown from external damage.



Conical spray nozzle with cap filter

Product code	Marking	Thread Size	α Angle	Lit per Min Bar 2	Lit per Min Bar 3	Lit per Min Bar 4	Lit per Min Bar 6	Lit per Min Bar 8	Lit per Min Bar 10	Color
22212078001	07 80	⅛"	80 °	0.041	0.05	0.057	0.066	0.074	0.083	White
22212078011	07 80F	⅛"	80 °	0.041	0.05	0.057	0.066	0.074	0.083	White
22212211055	21 105	⅛"	105 °	0.06	0.07	0.08	0.093	0.104	0.115	Creme
22212218008*	21 80	⅛"	80 °	0.103	0.124	0.149	0.171	0.194	0.216	Blue
22212221202	22 120	⅛"	120 °	0.103	0.124	0.149	0.171	0.194	0.216	Black

* non-drip
** Filtration 200 Mesh



Adjustable Nozzle

Product code	Name	Color
22214200001	Adjustable Nozzle	White



Nozzle Filter

Product code	Micron	L mm	Micron	Color
22212791100	140	21.1	120	White
*22212791000	140	21.1	120	Red

* non drop



Push-in Fitting Adaptor for ⅛" Nozzle

Product code	Stem D	Inner Thread	Color
22211502061	⅜"	⅛" NPT	White
22211502062	⅜"	⅛" NPT	Black



Misting Unit Mark 1

Product code	R1	R2	SW1	SW2	SW3	Color
222729T0101	11⁄16" NC	¼"	17.5	16	17.5 mm	White
222729T0102	11⁄16" NC	¼"	17.5	16	17.5 mm	Black



Valve Release / Drain Valve

Product code	Thread BSPT	Color
22273008002	½"	Black
22273108002	½"	

Valve release: Valve installed vertically upwards on the highest point. Functions as Anti-Vacuum (syphon) valve (CAT. No. 22273008002). Drain Valve with stainless spring. Valve installed at pipe end. For automatic drainage of condensed water in compressed-air lines, after shut-off of compressedair

Spraying & Fogging Nozzles

Polypropylene



Finger Filter for Hydraulic Valves

Product code	Tube ID	Length	SW	Micron	Color
22212002028	⅛" BSPT	30.3	14	160	Blue Short
22212791028	⅛" BSPT	43.8	14	160	Blue Long

Product code	Tube ID	Tube OD	Length	SW	Micron	Color
**22212791002	⅛" NPT	¼" NPT	48.3	14	160	Black

** speical design for control valves

Acetal



Nut 11/16" For Nozzle

Product code	Type
32272900082	11⁄16" NC



¼" Female Straight Nozzle Holder

Product code	R1	R2
32210300042	11⁄16" NC	¼" NPT



¼" Male Straight Nozzle Holder

Product code	R1	R2
32212200042	11⁄16" NC	¼" NPT



¼" Female 135° Nozzle Holder Cat. No.

Product code	R1	R2
32210000040	11⁄16" NC	¼" NPT

AIR BLOW GUNS

Tefen's Blow Guns are a widely used for spraying, disinfecting and machine and industrial cleaning. suitable for a wide use rang with our Fan Spray, Conical Spray and Adjustable nozzles (with flange connection).

Wide rang of input connections, lengths and tipping ends.
Internal nozzle filter- optional.


P. 108


P. 108


P. 108


P. 108


P. 109


P. 109


P. 109


P. 109


P. 109

Flow Products

Air Blow Guns



Air Blow Gun

With a general purpose nozzle

Product code	Type
22200004022	¼" female



Air Blow Gun

With an osha regulation safety nozzle

Product code	Type
22200004012	¼" female



Air Blow Gun

with an air screen nozzle to deflect flying chips away from operator

Product code	Type
22200004032	¼" female
22200011062	11/16" male



Air Blow Gun

with a restriction nozzle to regulate output air volume

Product code	Type
22200004042	¼" female

Air Blow Guns Spare Parts

For Product Code	Product Description	S. P. Code	S.P. Description	
22200004022	Air Blow Gun	32200015002	General purpose nozzle kit	
22200004012	Air Blow Gun	32200014006	Standard Osha nozzle kit	
22200004032	Air Blow Gun	32200016006	Air Screen Nozzle Kit	
22200011062	Air Blow Gun	32200016006	Air Screen Nozzle Kit	
22200004042	Air Blow Gun	32200017006	Restriction nozzle kit	



Air Blow Gun Mark II

Product code	Nozzle Type mm
22240000060	6 nozzle



Air Blow Gun Mark III

Product code
22230000000



Spray Gun

Product code	End connector inch
22210004002	¼" female
22210011003	11/16" male



Spray Gun - Iodine

Product code	End connector inch
22210004004	¼" female

Spray Guns Spare Part

For Product Code	Product Description	S. P. Code	S.P. Description
22210004002	Spray Gun	22210011014	Spray barrel set
		32210000010	Spray gun body - Female ¼ BSP
		22210011016	110-04 Nozzle elbow kit
		22100000200	Seal and valve set for spray gun kit
22210011003	Spray Gun	22210011014	Spray barrel set
		32210000020	Spray gun body - Male 11/16
		22210011016	110-04 Nozzle elbow kit
		22100000200	Seal and valve set for spray gun kit
22210004004	Spray Gun - Iodine	32210000010	Spray gun body - Female ¼ BSP
		22210038016	3-80 Nozzle elbow kit
		22100000200	Seal and valve set for spray gun kit



Spray gun body



Spray barrel set



Nozzle elbow kit



8 mm Nylon Retractable Coil

Product code	Length
24050505058	5 feet
24050505108	10 feet
24050505158	15 feet



0423

Tefen Flow & Dosing Technologies Ltd.
Kibbutz Nahsholim, 3081500 Israel | Tel. 972 4 6395554 | info@tefentech.com | tefentech.com

For the removal of any doubt, this documents does not constitute an offer on the part of Tefen and/or any undertaking on its part. Tefen may change the content of this document and/or the technical specifications of the products and/or add and/or remove products and/or change prices and/or any terms and conditions specified in this document at any time and upon its sole discretion without any prior notice.

ISO 9001
2015 certified